APPENDIX G

INSTRUMENTATION SUPPORT DRAWINGS

PRINT DIST.	
REVISIONS	
REV.	W.O.
0	ISSUED FOR REGULATORY APPROVAL

NOTES/SPECIFICATIONS

CONCRETE

1. REMOVE ALL DEBRIS AND DIRT FROM BENEATH SURFACES TO RECEIVE CONCRETE. POWERWASH ALL SURFACES PRIOR TO CONCRETE PLACEMENT.
2. AIR ENTRAINED, NORMAL WEIGHT STEEL FIBER REINFORCED CONCRETE SHALL HAVE A MINIMUM COMPRESSIVE STRENGTH (f'c) OF 3000 PSI. TYPE II CEMENT MEETING ASTM C150 SHALL BE USED. THE MIX SHALL HAVE A MAXIMUM ALLOWABLE WATER/CEMENT RATIO OF 0.45, AIR CONTENT BETWEEN 2 TO 3%, AND SLUMP BETWEEN 3–5 INCHES. AGGREGATES USED SHALL MEET ASTM C33 AND MAXIMUM SIZE SHALL BE 1". THE CONCRETE SHALL HAVE STEEL FIBERS A MINIMUM OF 33 POUNDS PER CUBIC YARD. THE STEEL FIBERS SHALL BE "XOREX", AS MANUFACTURED BY NOVOCON OR APPROVED EQUAL. ONLY POTABLE WATER SHALL BE USED. CONTRACTOR SHALL SUBMIT CONCRETE MIX DESIGN FOR ENGINEER'S APPROVAL BEFORE CONCRETE PLACEMENT.
3. ANY ADMIXTURE TO BE USED IN CONCRETE SHALL HAVE APPROVAL OF THE ENGINEER IN CHARGE PRIOR TO USE. NO ADMIXTURE CONTAINING CALCIUM CHLORIDE WILL BE ACCEPTABLE.
4. ALL REINFORCING BARS TO BE NEW DEFORMED BILLET STEEL PER ASTM A-615 GRADE 60 BARS. ALL WELDED WIRE FABRIC (WWF) TO BE IN ACCORDANCE WITH ASTM A-185. FURNISH WWF IN FLAT SHEETS ONLY. PLACE 2 INCHES BENEATH TOP OF SLAB SURFACE, UNLESS OTHERWISE NOTED.
5. DETAILING OF CONCRETE REINFORCEMENT SHALL BE IN ACCORDANCE WITH ACI 315 "MANUAL OF STANDARD PRACTICE OF DETAILING REINFORCED CONCRETE STRUCTURES". CLEARANCES AS NOTED ON DETAILS ON THIS SHEET.
6. HYDROTITE WATERSTOPS SHALL BE INSTALLED AS SHOWN ON THE DRAWINGS AND SHALL BE CONTINUOUS. WATERSTOPS SHALL BE INSTALLED PER MANUFACTURER'S INSTRUCTIONS USING A SEALANT AS NECESSARY.
7. ALL CONCRETE WORK SHALL BE IN ACCORDANCE WITH THE LATEST EDITION OF ACI 318 "BUILDING CODE REQUIREMENTS FOR REINFORCED CONCRETE".
8. CONTRACTOR SHALL BE SOLELY RESPONSIBLE FOR THE DESIGN AND ENGINEERING OF FORMWORK AS WELL AS ITS CONSTRUCTION. USE SMOOTH FORMS ON ALL SURFACES CONFORMING THE SHAPE LINE AND DIMENSIONS SHOWN. FORM COATING AND REMOVAL SHALL CONFORM TO ACI 347.
9. CURING SHALL CONFORM TO ACI 308. PROTECT FRESHLY DEPOSITED CONCRETE IMMEDIATELY FROM PREMATURE DRYING, EXCESSIVE HOT OR COLD TEMPERATURES AND EXCESSIVE MOISTURE LOSS FOR A PERIOD NOT LESS THAN 7 DAYS. PROTECT CONCRETE AND FINISHED SURFACES FROM DAMAGING MECHANICAL DISTURBANCES.
10. PROVIDE A SMOOTH FORMED FINISH ON ALL FORMED SURFACES AND A BROOM FINISH ON ALL UNFORMED SLAB SURFACES. ALL SLAB TOLERANCES SHALL MEET ACI 117 REQUIREMENTS.
11. QUALITY CONTROL:

    A– THE CONTRACTOR SHALL EMPLOY THE SERVICES OF AN INDEPENDENT TESTING LABORATORY TO PERFORM THE FOLLOWING:

    1– SLUMP TEST SHALL BE MADE IN THE FIELD AT A RATE OF ONE PER TRUCK.

    2– FIELD TEST CYLINDERS SPECIMENS SHALL BE TAKEN AT A RATE OF ONE SET PER 25 CUBIC YARDS AND IN GENERAL NOT LESS THAN ONE SET OF SPECIMENS WILL BE TAKEN IN ANY ONE DAY. ADDITIONAL CYLINDERS SHALL BE TAKEN AT THE ENGINEER'S DISCRETION. CONDUCT STRENGTH TEST FOR CONCRETE ACCORDING TO THE FOLLOWING PROCEDURES:

    A– SECURE SAMPLES IN ACCORDANCE WITH ASTM C–172.

    B– MOLD FIVE SPECIMENS FROM EACH SAMPLE ACCORDING TO ASTM C31. CURE UNDER STANDARD MOISTURE AND TEMPERATURE CONDITIONS AS SPECIFIED IN ASTM C31.

    C– TEST ONE SPECIMEN AT 7 DAYS AND AT 14 DAYS, AND TWO AT 28 DAYS ACCORDING TO ASTM C39. IF ONE OR BOTH OF THE 28–DAY TESTS INDICATE A COMPRESSIVE STRENGTH BELOW THE STRENGTH REQUIRED, THE FIFTH SPECIMEN SHALL BE TESTED AT 56 DAYS. THE STRENGTH OF THE CONCRETE WILL BE CONSIDERED POTENTIALLY DEFICIENT IF THE AVERAGES OF 2 CONSECUTIVE SETS OF STRENGTH TEST RESULTS FAIL TO EQUAL OR EXCEED THE SPECIFIED STRENGTH. ADDITIONAL TESTING MAY BE REQUIRED AS DIRECTED BY THE ENGINEER.

    3– DETERMINE THE FOLLOWING WHEN TEST CYLINDERS ARE TAKEN:
    A– AIR CONTENT
    B– SLUMP
    C– CONCRETE TEMPERATURE (NOTE: TEMPERATURE SHOULD BE CHECKED MORE FREQUENTLY IF ADVERSE WEATHER CONDITIONS ARE EXPECTED)

    B– TEST RESULTS WILL BE REPORTED IN WRITING TO ENGINEER WITHIN 24 HOURS THAT TESTS ARE MADE. REPORTS OF COMPRESSIVE STRENGTH TESTS SHALL CONTAIN THE PROJECT IDENTIFICATION NAME AND NUMBER, DATE OF CONCRETE BATCH IN STRUCTURE, DESIGN COMPRESSIVE STRENGTH AT 28 DAYS, CONCRETE MIX PROPORTIONS AND MATERIALS.

    C– CONCRETE AND CONCRETE WORK WHICH IN THE OPINION OF THE ENGINEER, DOES NOT MEET WITH THE REQUIREMENTS OF THIS SPECIFICATIONS OR WHICH DOES NOT REPRESENT GOOD WORKMANSHIP, SHALL BE REMOVED FROM THE SITE AND REPLACED WITH CONCRETE CONFORMING TO THE SPECIFICATIONS AT THE SOLE EXPENSE OF THE CONTRACTOR. THE DECISION OF THE ENGINEER AS TO WHETHER SUBSTANDARD CONCRETE IS TO BE ACCEPTED OR REJECTED SHALL BE FINAL.

OTHER NOTES

1. SEE SCHEDULE OF MATERIALS FOR SPECIFICATIONS OF OTHER MATERIALS.
2. ALL PRODUCTS SHALL BE INSTALLED PER MANUFACTURER'S INSTALLATION INSTRUCTIONS.
3. STAINLESS STEEL BATTENS SHALL BE CONTINUOUS SUPPORT TO LINER. BATTENS SHALL BUTT AGAINST EACH OTHER WITHOUT A GAP. BATTEN CANTILEVER FROM ANCHOR BOLT SHALL NOT EXCEED 6 INCHES.
4. CONTRACTOR SHALL BE RESPONSIBLE FOR DESIGN AND INSTALLATION OF TEMPORARY PLATFORMS AND SUPPORTS REQUIRED FOR INSTALLATION OF LINER SYSTEM.
5. CONTRACTOR SHALL TAKE ALL PRECAUTIONS SO AS NOT TO DAMAGE THE EXISTING STRUCTURES DURING INSTALLATION OF LINER SYSTEM. ANY DAMAGE INCURRED SHALL BE REPAIRED AT CONTRACTOR'S EXPENSE.

SCHEDULE OF MATERIALS

ITEM	MANUFACTURER	PRODUCT
GEOMEMBRANE	GSE LINING TECHNOLOGY, INC.	80 MIL HD TEXTURED
NONWOVEN GEOTEXTILE	GSE LINING TECHNOLOGY, INC.	NONWOVEN POLYPROPYLENE GEOTEXTILE NW18
WOVEN GEOTEXTILE	SYNTHETIC INDUSTRIES	–
ANCHOR BOLT (TYPE A)	HILTI	KWIK BOLT II, 1" DIAMETER, AISI 304 STAINLESS STEEL (WITH STAINLESS STEEL WASHERS)
ANCHOR BOLT (TYPE B)	HILTI	KWIK BOLT II, 1/2" DIAMETER, AISI 304 STAINLESS STEEL (WITH STAINLESS STEEL WASHERS)
BATTEN (ANGLE)	–	3" X 2" X 1/4" ANGLE, AISI 304 STAINLESS STEEL
BATTEN (FLAT)	–	2" X 1/4" FLAT STOCK, AISI 304 STAINLESS STEEL
POWDER ACTIVATED PIN	HILTI	X–CR, STAINLESS STEEL NAIL
GASKET	–	NEOPRENE
SILICONE SEAL (FOR WATERSTOP)	GREENSTREAK	LEAKMASTER
WATER STOP	GREENSTREAK	HYDROTITE CJ–0725–3K
POLYLOCK	GSE LINING TECHNOLOGY, INC.	POLYLOCK

NOTE: CONTRACTOR MAY REQUEST SUSTITUTION OF ANY PRODUCT PROVIDED CONTRACTOR CAN MAKE EQUIVALENCY DEMONSTRATION.

NOTICE OF LIMITED RESPONSIBILITY
THE RESPONSIBILITY OF THE UNDERSIGNED ENGINEER IS LIMITED TO THE DESIGN WORK SHOWN ON PROJECT DRAWINGS AND DOCUMENTS BEARING HIS/HER SEAL, SIGNATURE OR INITIALS. HE/SHE DOES NOT HAVE AUTHORITY OVER THE PROJECT AS A WHOLE. THE DESIGN SHOWN ON ANY DRAWING OR DOCUMENT NOT BEARING HIS/HER SEAL, SIGNATURE OR INITIALS, OR ANY DRAWING OR DOCUMENT NOT BEARING HIS/HER SEAL, SIGNATURE OR INITIALS, OR ANY DRAWING OR DOCUMENT ASSOCIATED WITH THE PROJECT WHICH DO NOT BEAR HIS/HER SEAL, SIGNATURE OR INITIALS.

STATE OF MISSOURI — ALAN E. MAXSON — E-22768 — REGISTERED PROFESSIONAL ENGINEER — 10/26/01

PREPARED BY
EMCON/OWT
Solid Waste Services

DRAWN	D. STEHLE	SIDE SLOPE RELINING
CHKD.	A.E. MAXSON	SPECIFICATIONS & SCHEDULES
SUPV.	N/A	
APPD. A. LARKY 12/28/01	LOCATION 0011010	8304-X-155099
Ameren	ST. LOUIS MISSOURI	TAUM SAUK UPPER RESERVOIR TAUM SAUK, MISSOURI
CLASS	REV NO. 0	

PRINT DIST.

REVISIONS

REV.	W.O.
0	

ISSUED FOR REGULATORY APPROVAL

REV.	W.O.
1	

REVISED PER COMMENTS

		1"
		1"
		1"
		1"
		1"
		1"

NOTE: CONTRACTOR MAY REQUEST SUSTITUTION OF ANY PRODUCT PROVIDED CONTRACTOR CAN MAKE EQUIVALENCY DEMONSTRATION.

NOTES/SPECIFICATIONS

CONCRETE

1. REMOVE ALL DEBRIS AND DIRT FROM BENEATH SURFACES TO RECEIVE CONCRETE. POWERWASH ALL SURFACES PRIOR TO CONCRETE PLACEMENT.
2. AIR ENTRAINED, NORMAL WEIGHT FIBER REINFORCED CONCRETE SHALL HAVE A MINIMUM COMPRESSIVE STRENGTH (f'c) OF 3000 PSI. TYPE II CEMENT MEETING ASTM C150 SHALL BE USED. THE MIX SHALL HAVE A MAXIMUM ALLOWABLE WATER/CEMENT RATIO OF 0.45, AIR CONTENT BETWEEN 2 TO 3%, AND SLUMP BETWEEN 3-5 INCHES. AGGREGATES USED SHALL MEET ASTM C33 AND MAXIMUM SIZE SHALL BE 1". THE CONCRETE SHALL HAVE POLYPROPYLENE FIBERS A MINIMUM OF 3.3 POUNDS PER CUBIC YARD. ONLY POTABLE WATER SHALL BE USED. CONTRACTOR SHALL SUBMIT CONCRETE MIX DESIGN FOR ENGINEER'S APPROVAL BEFORE CONCRETE PLACEMENT. 1
3. ANY ADMIXTURE TO BE USED IN CONCRETE SHALL HAVE APPROVAL OF THE ENGINEER IN CHARGE PRIOR TO USE. NO ADMIXTURE CONTAINING CALCIUM CHLORIDE WILL BE ACCEPTABLE.
4. ALL REINFORCING BARS TO BE NEW DEFORMED BILLET STEEL PER ASTM A-615 GRADE 60 BARS. ALL WELDED WIRE FABRIC (WWF) TO BE IN ACCORDANCE WITH ASTM A-185. FURNISH WWF IN FLAT SHEETS ONLY. PLACE 2 INCHES BENEATH TOP OF SLAB SURFACE, UNLESS OTHERWISE NOTED.
5. DETAILING OF CONCRETE REINFORCEMENT SHALL BE IN ACCORDANCE WITH ACI 315 "MANUAL OF STANDARD PRACTICE OF DETAILING REINFORCED CONCRETE STRUCTURES". CLEARANCES AS NOTED ON DETAILS ON THIS SHEET.
6. HYDRORITE WATERSTOPS SHALL BE INSTALLED AS SHOWN ON THE DRAWINGS AND SHALL BE CONTINUOUS. WATERSTOPS SHALL BE INSTALLED PER MANUFACTURER'S INSTRUCTIONS USING A SEALANT AS NECESSARY.
7. ALL CONCRETE WORK SHALL BE IN ACCORDANCE WITH THE LATEST EDITION OF ACI 318 "BUILDING CODE REQUIREMENTS FOR REINFORCED CONCRETE".
8. CONTRACTOR SHALL BE SOLELY RESPONSIBLE FOR THE DESIGN AND ENGINEERING OF FORMWORK AS WELL AS ITS CONSTRUCTION. USE SMOOTH FORMS ON ALL SURFACES CONFORMING THE SHAPE LINE AND DIMENSIONS SHOWN. FORM COATING AND REMOVAL SHALL CONFORM TO ACI 347.
9. CURING SHALL CONFORM TO ACI 308. PROTECT FRESHLY DEPOSITED CONCRETE IMMEDIATELY FROM PREMATURE DRYING, EXCESSIVE HOT OR COLD TEMPERATURES AND EXCESSIVE MOISTURE LOSS FOR A PERIOD NOT LESS THAN 7 DAYS. PROTECT CONCRETE AND FINISHED SURFACES FROM DAMAGING MECHANICAL DISTURBANCES.
10. PROVIDE A SMOOTH FORMED FINISH ON ALL FORMED SURFACES AND A BROOM FINISH ON ALL UNFORMED SLAB SURFACES. ALL SLAB TOLERANCES SHALL MEET ACI 117 REQUIREMENTS.

GEOSYNTHETICS

1. SEE "CQA/CQC PLAN - TAUM SAUK PUMPED STORAGE FACILITY UPPER RESEVOIR RELINING PROJECT" FOR GEOSYNTHETICS MATERIAL AND INSTALLATION REQUIREMENTS AND QUALITY CONTROL/ QUALITY ASSURANCE PROCEDURES. 1

OTHER NOTES

1. SEE SCHEDULE OF MATERIALS FOR SPECIFICATIONS OF OTHER MATERIALS.
2. ALL PRODUCTS SHALL BE INSTALLED PER MANUFACTURER'S INSTALLATION INSTRUCTIONS.
3. STAINLESS STEEL BATTENS SHALL BE CONTINUOUS SUPPORT TO LINER. BATTENS SHALL BUTT AGAINST EACH OTHER WITHOUT A GAP. BATTEN CANTILEVER FROM ANCHOR BOLT SHALL NOT EXCEED 6 INCHES.
4. CONTRACTOR SHALL BE RESPONSIBLE FOR DESIGN AND INSTALLATION OF TEMPORARY PLATFORMS AND SUPPORTS REQUIRED FOR INSTALLATION OF LINER SYSTEM.
5. CONTRACTOR SHALL TAKE ALL PRECAUTIONS SO AS NOT TO DAMAGE THE EXISTING STRUCTURES DURING INSTALLATION OF LINER SYSTEM. ANY DAMAGE INCURRED SHALL BE REPAIRED AT CONTRACTOR'S EXPENSE.

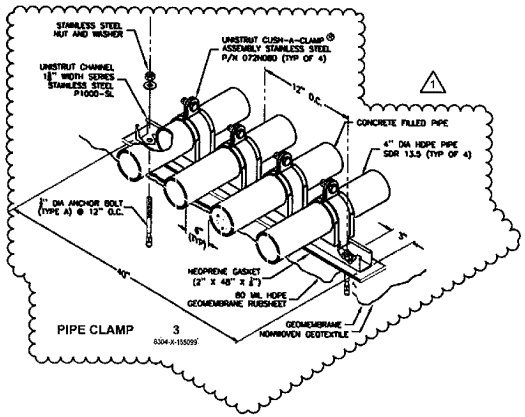

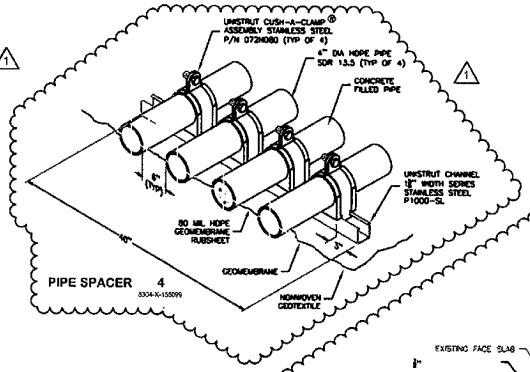

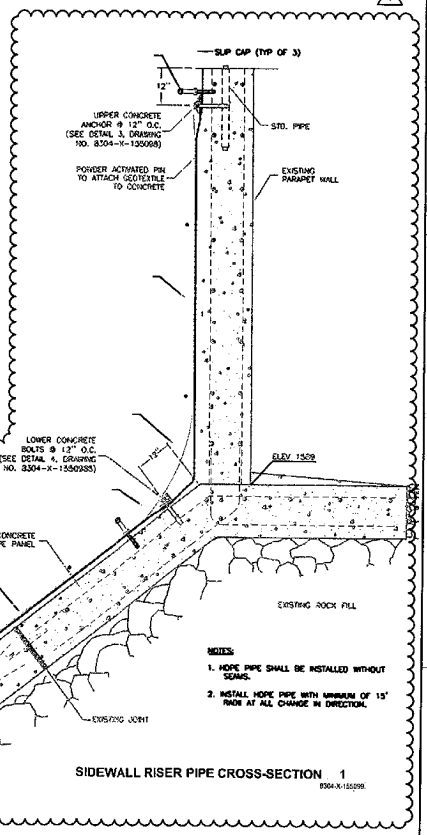

NOTES:

1. HDPE PIPE SHALL BE INSTALLED WITHOUT SEAMS.
2. INSTALL HDPE PIPE WITH MINIMUM OF 15' RADII AT ALL CHANGE IN DIRECTION.

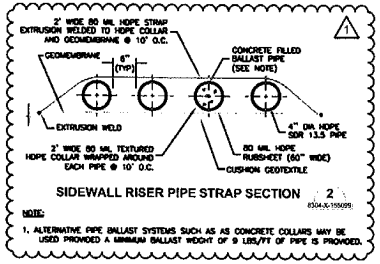

NOTE:

1. ALTERNATIVE PIPE BALLAST SYSTEMS SUCH AS AS CONCRETE COLLARS MAY BE USED PROVIDED A MINIMUM BALLAST WEIGHT OF 9 LBS/FT OF PIPE IS PROVIDED.

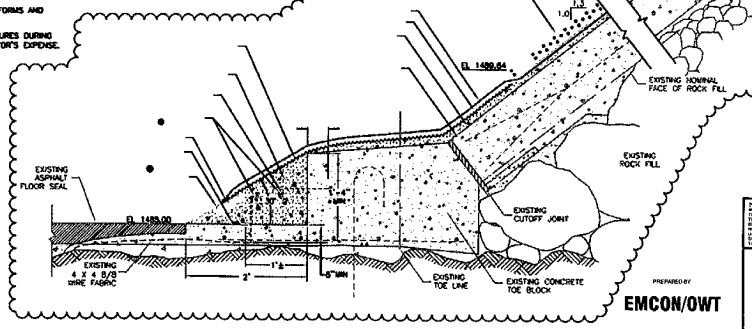

PREPARED BY

EMCON/OWT

NOTICE OF LIMITED RESPONSIBILITY

THE RESPONSIBILITY OF THE UNDERSIGNED IS LIMITED TO THE DESIGN WORK SHOWN ON PROJECT DRAWINGS AND SPECIFICATIONS BEARING THEIR SEALS. THE UNDERSIGNED DO NOT HOLD AUTHORITY OVER THE PROJECT AS A WHOLE. THE UNDERSIGNED DISCLAIMS ANY RESPONSIBILITY FOR WORK DONE UNDER THEIR DESIGN REVISIONS AND ANY OTHER DOCUMENT ASSOCIATED WITH THE PROJECT NOT BEARING THEIR SEAL, SIGNATURE OR INITIALS.

DRAWN	D. STEHLE	SIDE SLOPE RELINING DETAILS - III, SPECIFICATIONS & SCHEDULES	
CHK'D.	A. LARKY		
SUPV.			
APPD.	LOCATION 0011010	8304-X-155099	CLASS
	ST. LOUIS MISSOURI	TAUM SAUK UPPER RESERVOIR TAUM SAUK, MISSOURI	REV NO. 1

PRINT DIST.	REVISIONS
REV 0 W.O. DATE 12/28/01	ISSUED FOR REGULATORY APPROVAL
REV 1 W.O. DATE 03/07/02	REVISED PER COMMENTS
REV 2 W.O. DATE 04/11/02	REVISED PER FIELD CHANGES

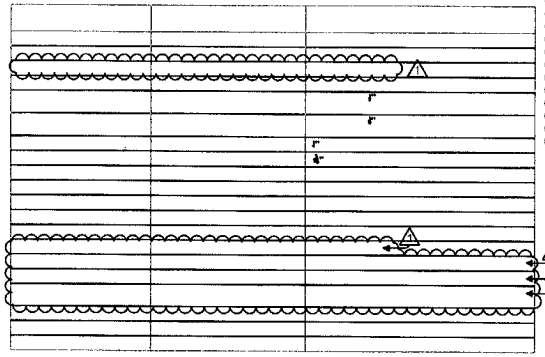

NOTE: CONTRACTOR MAY REQUEST SUBSTITUTION OF ANY PRODUCT PROVIDED CONTRACTOR CAN MAKE EQUIVALENCY DEMONSTRATION.

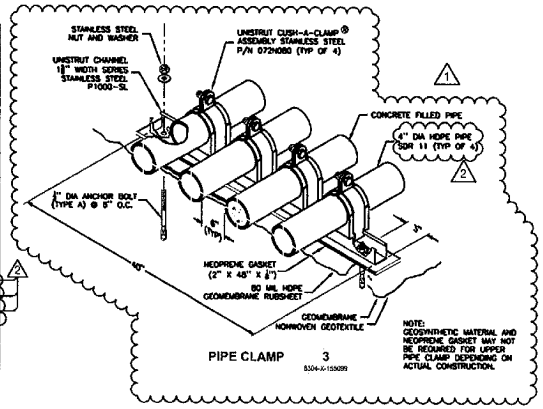

NOTE: GEOSYNTHETIC MATERIAL AND NEOPRENE GASKET MAY NOT BE REQUIRED FOR UPPER PIPE CLAMP DEPENDING ON ACTUAL CONSTRUCTION.

PIPE CLAMP 3
8304-X-155099

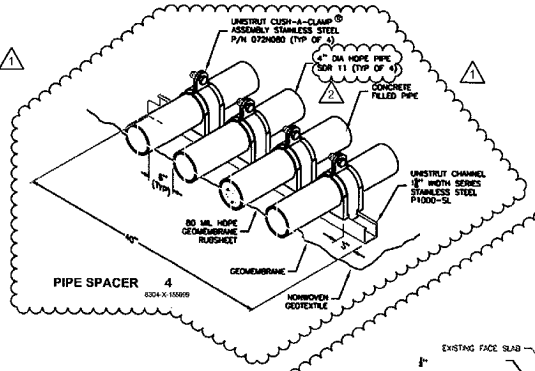

PIPE SPACER 4
8304-X-155099

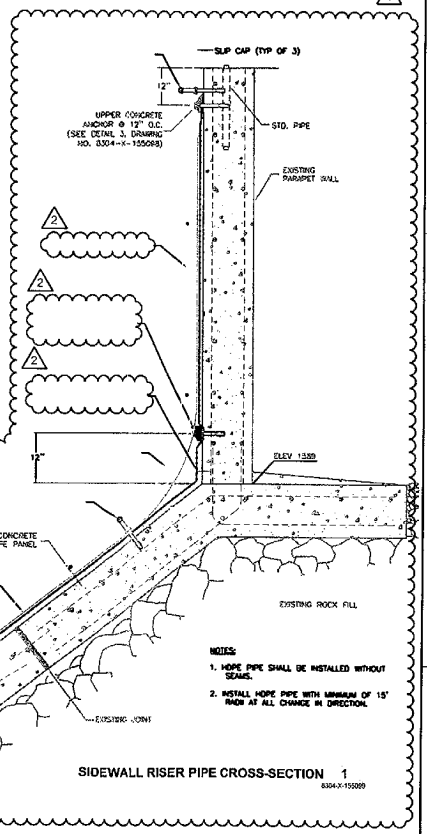

NOTES:

1. HDPE PIPE SHALL BE INSTALLED WITHOUT SEAMS.
2. INSTALL HDPE PIPE WITH MINIMUM OF 15' RADII AT ALL CHANGE IN DIRECTION.

SIDEWALL RISER PIPE CROSS-SECTION 1
8304-X-155099

NOTES/SPECIFICATIONS

CONCRETE

1. REMOVE ALL DEBRIS AND DIRT FROM BENEATH SURFACES TO RECEIVE CONCRETE. POWERWASH ALL SURFACES PRIOR TO CONCRETE PLACEMENT.
2. AIR ENTRAINED, NORMAL WEIGHT FIBER REINFORCED CONCRETE SHALL HAVE A MINIMUM COMPRESSIVE STRENGTH (f'c) OF 3000 PSI. TYPE I CEMENT MEETING ASTM C150 SHALL BE USED. THE MIX SHALL HAVE A MAXIMUM ALLOWABLE WATER/CEMENT RATIO OF 0.45, AIR CONTENT BETWEEN 2 TO 3%, AND SLUMP BETWEEN 3-5 INCHES. AGGREGATES USED SHALL MEET ASTM C33 AND MAXIMUM SIZE SHALL BE 1". THE CONCRETE SHALL HAVE POLYPROPYLENE FIBERS A MINIMUM OF 3.5 POUNDS PER CUBIC YARD. ONLY POTABLE WATER SHALL BE USED. CONTRACTOR SHALL SUBMIT CONCRETE MIX DESIGN FOR ENGINEER'S APPROVAL BEFORE CONCRETE PLACEMENT.
3. ANY ADMIXTURE TO BE USED IN CONCRETE SHALL HAVE APPROVAL OF THE ENGINEER IN CHARGE PRIOR TO USE. NO ADMIXTURE CONTAINING CALCIUM CHLORIDE WILL BE ACCEPTABLE.
4. ALL REINFORCING BARS TO BE NEW DEFORMED BILLET STEEL PER ASTM A-615 GRADE 60 BARS. ALL WELDED WIRE FABRIC (WWF) TO BE IN ACCORDANCE WITH ASTM A-185. FURNISH WWF IN FLAT SHEETS ONLY. PLACE 2 INCHES BENEATH TOP OF SLAB SURFACE, UNLESS OTHERWISE NOTED.
5. DETAILING OF CONCRETE REINFORCEMENT SHALL BE IN ACCORDANCE WITH ACI 315 "MANUAL OF STANDARD PRACTICE OF DETAILING REINFORCED CONCRETE STRUCTURES". CLEARANCES AS NOTED ON DETAILS ON THIS SHEET.
6. HYDROTITE WATERSTOPS SHALL BE INSTALLED AS SHOWN ON THE DRAWINGS AND SHALL BE CONTINUOUS. WATERSTOPS SHALL BE INSTALLED PER MANUFACTURER'S INSTRUCTIONS USING A SEALANT AS NECESSARY.
7. ALL CONCRETE WORK SHALL BE IN ACCORDANCE WITH THE LATEST EDITION OF ACI 318 "BUILDING CODE REQUIREMENTS FOR REINFORCED CONCRETE".
8. CONTRACTOR SHALL BE SOLELY RESPONSIBLE FOR THE DESIGN AND ENGINEERING OF FORMWORK AS WELL AS ITS CONSTRUCTION. USE SMOOTH FORMS ON ALL SURFACES CONFORMING THE SHAPE LINE AND DIMENSIONS SHOWN. FORM COATING AND REMOVAL SHALL CONFORM TO ACI 347.
9. CURING SHALL CONFORM TO ACI 308. PROTECT FRESHLY DEPOSITED CONCRETE IMMEDIATELY FROM PREMATURE DRYING, EXCESSIVE HOT OR COLD TEMPERATURES AND EXCESSIVE MOISTURE LOSS FOR A PERIOD NOT LESS THAN 7 DAYS. PROTECT CONCRETE AND FINISHED SURFACES FROM DAMAGING MECHANICAL DISTURBANCES.
10. PROVIDE A SMOOTH FORMED FINISH ON ALL FORMED SURFACES AND A BROOM FINISH ON ALL UNFORMED SLAB SURFACES. ALL SLAB TOLERANCES SHALL MEET ACI 117 REQUIREMENTS.

GEOSYNTHETICS

1. SEE "COA/COC PLAN – TAUM SAUK PUMPED STORAGE FACILITY UPPER RESEVOIR RELINING PROJECT" FOR GEOSYNTHETICS MATERIAL AND INSTALLATION REQUIREMENTS AND QUALITY CONTROL/ QUALITY ASSURANCE PROCEDURES.

OTHER NOTES

1. SEE SCHEDULE OF MATERIALS FOR SPECIFICATIONS OF OTHER MATERIALS.
2. ALL PRODUCTS SHALL BE INSTALLED PER MANUFACTURER'S INSTALLATION INSTRUCTIONS.
3. STAINLESS STEEL BATTENS SHALL BE CONTINUOUS SUPPORT TO LINER. BATTENS SHALL BUTT AGAINST EACH OTHER WITHOUT A GAP. BATTEN CANTILEVER FROM ANCHOR BOLT SHALL NOT EXCEED 6 INCHES.
4. CONTRACTOR SHALL BE RESPONSIBLE FOR DESIGN AND INSTALLATION OF TEMPORARY PLATFORMS AND SUPPORTS REQUIRED FOR INSTALLATION OF LINER SYSTEM.
5. CONTRACTOR SHALL TAKE ALL PRECAUTIONS SO AS NOT TO DAMAGE THE EXISTING STRUCTURES DURING INSTALLATION OF LINER SYSTEM. ANY DAMAGE INCURRED SHALL BE REPAIRED AT CONTRACTOR'S EXPENSE.

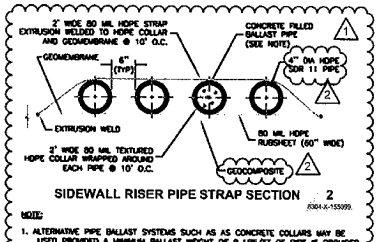

SIDEWALL RISER PIPE STRAP SECTION 2
8304-X-155099

NOTE:

1. ALTERNATIVE PIPE BALLAST SYSTEMS SUCH AS AS CONCRETE COLLARS MAY BE USED PROVIDED A MINIMUM BALLAST WEIGHT OF 9 LBS/FT OF PIPE IS PROVIDED.

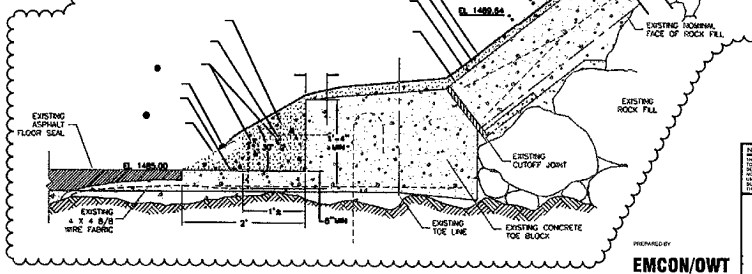

PREPARED BY
EMCON/OWT

NOTICE OF LIMITED RESPONSIBILITY

DRAWN	D. STEELE	SIDE SLOPE RELINING DETAILS - III, SPECIFICATIONS & SCHEDULES
DSIGN.	A. LARRY	
SUPV.	N/A	
APPD.	A. LARRY 12/28/01	LOCATOR 0011018 — 8304-X-155099 — CLASS
	ST. LOUIS MISSOURI	TAUM SAUK UPPER RESERVOIR, TAUM SAUK, MISSOURI — REV/NO. 2

PRINT DIST.	
REVISIONS	
REV. 0	W.O. DATE 12/06/01 — ISSUED FOR REGULATORY APPROVAL
REV. 1	W.O. DATE 03/07/02 — REVISED PER COMMENTS
REV. 2	W.O. DATE 04/11/02 — REVISED PER FIELD CHANGES
REV. 3	W.O. DATE 06/18/03 — REVISED PER FIELD ACTIVITIES

SCHEDULE OF MATERIALS

ITEM	MANUFACTURER	PRODUCT
GEOMEMBRANE	GSE LINING TECHNOLOGY, INC.	80 MIL HDPE TEXTURED GEOMEMBRANE
[illegible]	[illegible]	[illegible]
GEONET	GSE LINING TECHNOLOGY, INC.	HYDRONET HP
[illegible]	[illegible]	[illegible]
ANCHOR BOLT (TYPE A)	[illegible]	[illegible] (WITH STAINLESS STEEL WASHERS)
ANCHOR BOLT (TYPE B)	[illegible]	[illegible] (WITH STAINLESS STEEL WASHERS)
BATTEN ANGLES		[illegible] X [illegible] X [illegible] ANGLE, 304 STAINLESS STEEL
BATTEN PLATE	–	[illegible] X [illegible] PLATE, 304 STAINLESS STEEL
INSERTED ACTUATED PIN	HILTI OR APPROVED EQUAL	X-ENP CONNECTED STEEL PIN WITH HORIZONTAL WASHER
GASKET	–	NEOPRENE
SILICONE SEAL (FOR WATERSTOP)	GREENSTREAK	CLEARMASTER
WATER STOPS	GREENSTREAK	HYDROTITE [illegible]-34
[illegible]	GSE LINING TECHNOLOGY, INC.	[illegible]
HDPE PIPE	CHEVRON	PAXONOX PE-3408
WIDE GEOMEMBRANE	GSE LINING TECHNOLOGY, INC.	80 MIL TEXTURED ULTRA FLEXIBLE GEOMEMBRANE
GEOCOMPOSITE	CONTECH GEOSYNTHETICS, INC.	[illegible]
GEONET	GSE LINING TECHNOLOGY, INC.	CUSPNET - FIBER NONWOVEN POLYPROPYLENE GEOTEXTILE [illegible]

NOTE: CONTRACTOR MAY REQUEST SUSTITUTION OF ANY PRODUCT PROVIDED CONTRACTOR CAN MAKE EQUIVALENCY DEMONSTRATION.

NOTES/SPECIFICATIONS

CONCRETE

1. REMOVE ALL DEBRIS AND DIRT FROM BENEATH SURFACES TO RECEIVE CONCRETE. POWERWASH ALL SURFACES PRIOR TO CONCRETE PLACEMENT.
2. AIR ENTRAINED, NORMAL WEIGHT FIBER REINFORCED CONCRETE SHALL HAVE A MINIMUM COMPRESSIVE STRENGTH (F'c) OF 3000 PSI. TYPE II CEMENT MEETING ASTM C150 SHALL BE USED. THE MIX SHALL HAVE A MAXIMUM ALLOWABLE WATER/CEMENT RATIO OF 0.45, AIR CONTENT BETWEEN 2 TO 3%, AND SLUMP BETWEEN 3-5 INCHES. AGGREGATES USED SHALL MEET ASTM C33 AND MAXIMUM SIZE SHALL BE 1". THE CONCRETE SHALL HAVE POLYPROPYLENE FIBERS A MINIMUM OF 3.3 POUNDS PER CUBIC YARD. ONLY POTABLE WATER SHALL BE USED. CONTRACTOR SHALL SUBMIT CONCRETE MIX DESIGN FOR ENGINEER'S APPROVAL BEFORE CONCRETE PLACEMENT.
3. ANY ADMIXTURE TO BE USED IN CONCRETE SHALL HAVE APPROVAL OF THE ENGINEER IN CHARGE PRIOR TO USE. NO ADMIXTURE CONTAINING CALCIUM CHLORIDE WILL BE ACCEPTABLE.
4. ALL REINFORCING BARS TO BE NEW DEFORMED BILLET STEEL PER ASTM A-615 GRADE 60 BARS. ALL WELDED WIRE FABRIC (WWF) TO BE IN ACCORDANCE WITH ASTM A-185. FURNISH WWF IN FLAT SHEETS ONLY. PLACE 2 INCHES BENEATH TOP OF SLAB SURFACE, UNLESS OTHERWISE NOTED.
5. DETAILING OF CONCRETE REINFORCEMENT SHALL BE IN ACCORDANCE WITH ACI 315 "MANUAL OF STANDARD PRACTICE OF DETAILING REINFORCED CONCRETE STRUCTURES". CLEARANCES AS NOTED ON DETAILS ON THIS SHEET.
6. HYDROTITE WATERSTOPS SHALL BE INSTALLED AS SHOWN ON THE DRAWINGS AND SHALL BE CONTINUOUS. WATERSTOPS SHALL BE INSTALLED PER MANUFACTURER'S INSTRUCTIONS USING A SEALANT AS NECESSARY.
7. ALL CONCRETE WORK SHALL BE IN ACCORDANCE WITH THE LATEST EDITION OF ACI 318 "BUILDING CODE REQUIREMENTS FOR REINFORCED CONCRETE".
8. CONTRACTOR SHALL BE SOLELY RESPONSIBLE FOR THE DESIGN AND ENGINEERING OF FORMWORK AS WELL AS ITS CONSTRUCTION. USE SMOOTH FORMS ON ALL SURFACES CONFORMING THE SHAPE LINE AND DIMENSIONS SHOWN. FORM COATING AND REMOVAL SHALL CONFORM TO ACI 347.
9. CURING SHALL CONFORM TO ACI 308. PROTECT FRESHLY DEPOSITED CONCRETE IMMEDIATELY FROM PREMATURE DRYING, EXCESSIVE HOT OR COLD TEMPERATURES AND EXCESSIVE MOISTURE LOSS FOR A PERIOD NOT LESS THAN 7 DAYS. PROTECT CONCRETE AND FINISHED SURFACES FROM DAMAGING MECHANICAL DISTURBANCES.
10. PROVIDE A SMOOTH FORMED FINISH ON ALL FORMED SURFACES AND A BROOM FINISH ON ALL UNFORMED SLAB SURFACES. ALL SLAB TOLERANCES SHALL MEET ACI 117 REQUIREMENTS.

GEOSYNTHETICS

1. SEE "CQA/CQC PLAN – TAUM SAUK PUMPED STORAGE FACILITY UPPER RESEVOIR RELINING PROJECT" FOR GEOSYNTHETICS MATERIAL AND INSTALLATION REQUIREMENTS AND QUALITY CONTROL/ QUALITY ASSURANCE PROCEDURES.

OTHER NOTES

1. SEE SCHEDULE OF MATERIALS FOR SPECIFICATIONS OF OTHER MATERIALS.
2. ALL PRODUCTS SHALL BE INSTALLED PER MANUFACTURER'S INSTALLATION INSTRUCTIONS.
3. STAINLESS STEEL BATTENS SHALL BE CONTINUOUS SUPPORT TO LINER. BATTENS SHALL BUTT AGAINST EACH OTHER WITHOUT A GAP. BATTEN CANTILEVER FROM ANCHOR BOLT SHALL NOT EXCEED 6 INCHES.
4. CONTRACTOR SHALL BE RESPONSIBLE FOR DESIGN AND INSTALLATION OF TEMPORARY PLATFORMS AND SUPPORTS REQUIRED FOR INSTALLATION OF LINER SYSTEM.
5. CONTRACTOR SHALL TAKE ALL PRECAUTIONS SO AS NOT TO DAMAGE THE EXISTING STRUCTURES DURING INSTALLATION OF LINER SYSTEM. ANY DAMAGE INCURRED SHALL BE REPAIRED AT CONTRACTOR'S EXPENSE.

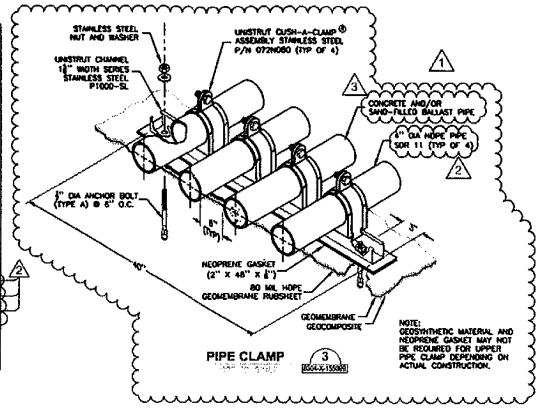

NOTE: GEOSYNTHETIC MATERIAL AND NEOPRENE GASKET MAY NOT BE REQUIRED FOR UPPER PIPE CLAMP DEPENDING ON ACTUAL CONSTRUCTION.

PIPE CLAMP 3 (8304-X-155099)

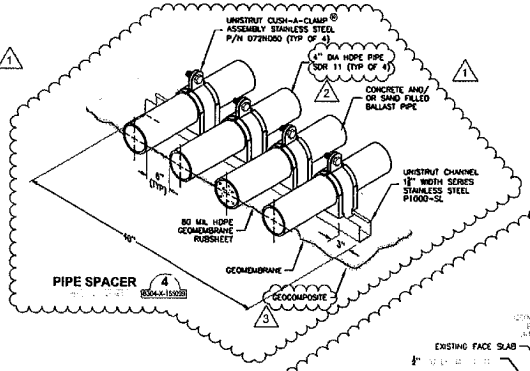

PIPE SPACER 4 (8304-X-155099)

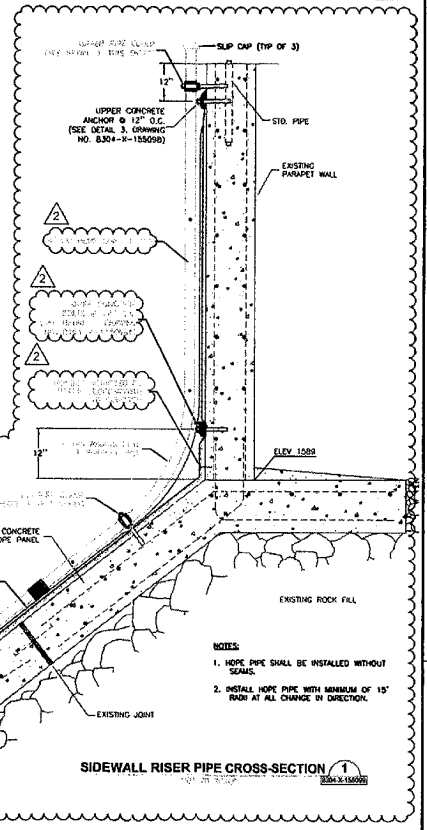

NOTES:
1. HDPE PIPE SHALL BE INSTALLED WITHOUT SEAMS.
2. INSTALL HDPE PIPE WITH MINIMUM OF 15' RADII AT ALL CHANGE IN DIRECTION.

SIDEWALL RISER PIPE CROSS-SECTION 1 (8304-X-155099)

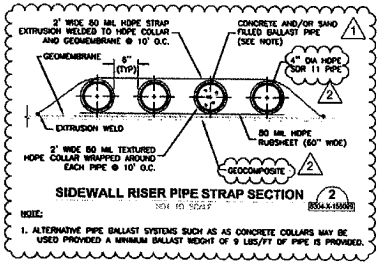

SIDEWALL RISER PIPE STRAP SECTION 2 (8304-X-155099)

NOTE:
1. ALTERNATIVE PIPE BALLAST SYSTEMS SUCH AS AS CONCRETE COLLARS MAY BE USED PROVIDED A MINIMUM BALLAST WEIGHT OF 9 LBS/FT OF PIPE IS PROVIDED.

NOTICE OF LIMITED RESPONSIBILITY

PREPARED BY Shaw® EMCON/OWT, Inc.

DRAWN D. STEMLE	SIDE SLOPE RELINING DETAILS - III, SPECIFICATIONS & SCHEDULES		
CHKD. F. LARKY			
SUPV. N/A			
APPD. A. LARKY 12/06/01	LOCATION 001010	8304-X-155099	CLASS
AMEREN	ST. LOUIS MISSOURI	TAUM SAUK UPPER RESERVOIR TAUM SAUK, MISSOURI	REVISED 3

REVISIONS	
REV. 0	W.O. DATE 12/26/01 — ISSUED FOR REGULATORY APPROVAL
REV.	W.O. DATE 03/07/02 — REVISED PER COMMENTS
REV. 2	W.O. DATE 04/11/02 — REVISED PER FIELD CHANGES
REV. 3	W.O. DATE 09/18/03 — REVISED PER FIELD ACTIVITIES
REV. 4	W.O. DATE 09/01/04 — ADDED WELD TO WALL, REVISED GEOMEMBRANE AND GEOCOMPOSITE AND LOWERED LOWER BATTEN
REV. 5	W.O. DATE 10/05/04

SCHEDULE OF MATERIALS

ITEM	MANUFACTURER	PRODUCT
GEOMEMBRANE	GSE LINING TECHNOLOGY, INC.	80 MIL HD TEXTURED GEOMEMBRANE
~~NONWOVEN GEOTEXTILE~~	~~GSE LINING TECHNOLOGY, INC.~~	~~NONWOVEN POLYPROPYLENE GEOTEXTILE NW16~~
~~GEONET~~	~~GSE LINING TECHNOLOGY, INC.~~	~~HYPERNET HF~~
~~WOVEN GEOTEXTILE~~	~~HUCKER OR SYNTHETIC INDUSTRIES~~	~~COURTNO 200 OR GEOTEX 18 K 6~~
ANCHOR BOLT (TYPE A)	HILTI	KWIK BOLT II, 1" DIAMETER, AISI 304 STAINLESS STEEL (WITH STAINLESS STEEL WASHERS)
ANCHOR BOLT (TYPE B)	HILTI	KWIK BOLT II, 1" DIAMETER, AISI 304 STAINLESS STEEL (WITH STAINLESS STEEL WASHERS)
BATTEN (ANGLE)	–	1"X 3"X 3" ANGLE, AISI STAINLESS STEEL
BATTEN (FLAT)	–	1/8"X 2" FLAT STOCK, AISI STAINLESS STEEL
POWDER ACTIVATED PIN	HILTI OR APPROVED EQUAL	X-DNI GALVANIZED STEEL PIN WITH INTEGRAL WASHER
GASKET	–	NEOPRENE
SILICONE SEAL (FOR WATERSTOP)	GREENSTREAK	LEAKMASTER
WATER STOP	GREENSTREAK	HYDROTITE CJ-0725-3K
POLYLOCK	GSE LINING TECHNOLOGY, INC.	POLYLOCK
HDPE PIPE	CPCHEM	PLEXCO PE-3408
VFPE GEOMEMBRANE	GSE LINING TECHNOLOGY, INC.	80 MIL TEXTURED ULTRA FRICTIONFLEX GEOMEMBRANE
GEOFOAM	CONTOUR (FOAM) PRODUCTS, INC.	ASTI TYPE IX GEOFOAM
GEOCOMPOSITE	GSE LINING TECHNOLOGY, INC.	DOUBLE-SIDED NONWOVEN POLYPROPYLENE GEOTEXTILE NW8 AND HYPERNET HF

NOTE: CONTRACTOR MAY REQUEST SUSTITUTION OF ANY PRODUCT PROVIDED CONTRACTOR CAN MAKE EQUIVALENCY DEMONSTRATION.

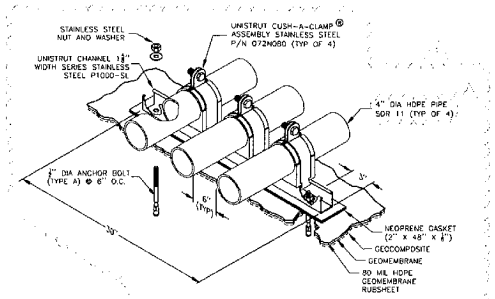

PIPE CLAMP (3) — NOT TO SCALE — 8304-X-155099

NOTE: GEOSYNTHETIC MATERIAL AND NEOPRENE GASKET MAY NOT BE REQUIRED FOR UPPER PIPE CLAMP DEPENDING ON ACTUAL CONSTRUCTION.

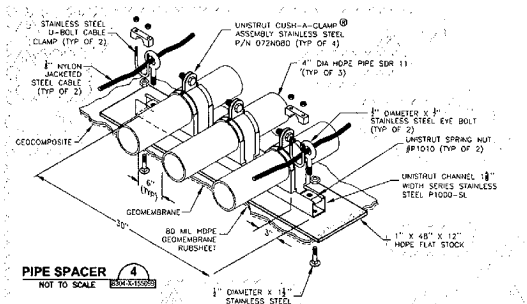

PIPE SPACER (4) — NOT TO SCALE — 8304-X-155099

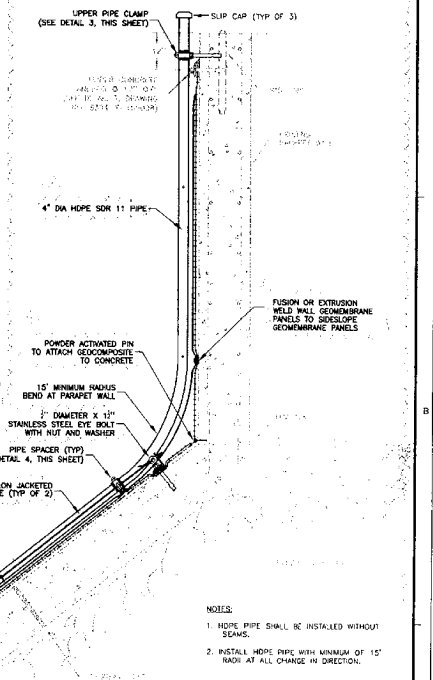

SIDEWALL RISER PIPE CROSS-SECTION (1) — NOT TO SCALE — 8304-X-155099

NOTES:

1. HDPE PIPE SHALL BE INSTALLED WITHOUT SEAMS.
2. INSTALL HDPE PIPE WITH MINIMUM OF 15' RADII AT ALL CHANGE IN DIRECTION.

NOTES/SPECIFICATIONS

CONCRETE

1. REMOVE ALL DEBRIS AND DIRT FROM BENEATH SURFACES TO RECEIVE CONCRETE. POWERWASH ALL SURFACES PRIOR TO CONCRETE PLACEMENT.
2. AIR ENTRAINED, NORMAL WEIGHT FIBER REINFORCED CONCRETE SHALL HAVE A MINIMUM COMPRESSIVE STRENGTH (f'c) OF 3000 PSI. TYPE II CEMENT MEETING ASTM C150 SHALL BE USED. THE MIX SHALL HAVE A MAXIMUM ALLOWABLE WATER/CEMENT RATIO OF 0.45, AIR CONTENT BETWEEN 2 TO 3%, AND SLUMP BETWEEN 3-5 INCHES. AGGREGATES USED SHALL MEET ASTM C33 AND MAXIMUM SIZE SHALL BE 1". THE CONCRETE SHALL HAVE POLYPROPYLENE FIBERS A MINIMUM OF 33 POUNDS PER CUBIC YARD. ONLY POTABLE WATER SHALL BE USED. CONTRACTOR SHALL SUBMIT CONCRETE MIX DESIGN FOR ENGINEER'S APPROVAL BEFORE CONCRETE PLACEMENT.
3. ANY ADMIXTURE TO BE USED IN CONCRETE SHALL HAVE APPROVAL OF THE ENGINEER IN CHARGE PRIOR TO USE. NO ADMIXTURE CONTAINING CALCIUM CHLORIDE WILL BE ACCEPTABLE.
4. ALL REINFORCING BARS TO BE NEW DEFORMED BILLET STEEL PER ASTM A-615 GRADE 60 BARS. ALL WELDED WIRE FABRIC (WWF) TO BE IN ACCORDANCE WITH ASTM A-185. FURNISH WWF IN FLAT SHEETS ONLY. PLACE 2 INCHES BENEATH TOP OF SLAB SURFACE, UNLESS OTHERWISE NOTED.
5. DETAILING OF CONCRETE REINFORCEMENT SHALL BE IN ACCORDANCE WITH ACI 315 "MANUAL OF STANDARD PRACTICE OF DETAILING REINFORCED CONCRETE STRUCTURES". CLEARANCES AS NOTED ON DETAILS ON THIS SHEET.
6. HYDROTITE WATERSTOPS SHALL BE INSTALLED AS SHOWN ON THE DRAWINGS AND SHALL BE CONTINUOUS. WATERSTOPS SHALL BE INSTALLED PER MANUFACTURER'S INSTRUCTIONS USING A SEALANT AS NECESSARY.
7. ALL CONCRETE WORK SHALL BE IN ACCORDANCE WITH THE LATEST EDITION OF ACI 318 "BUILDING CODE REQUIREMENTS FOR REINFORCED CONCRETE".
8. CONTRACTOR SHALL BE SOLELY RESPONSIBLE FOR THE DESIGN AND ENGINEERING OF FORMWORK AS WELL AS ITS CONSTRUCTION. USE SMOOTH FORMS ON ALL SURFACES CONFORMING THE SHAPE LINE AND DIMENSIONS SHOWN. FORM COATING AND REMOVAL SHALL CONFORM TO ACI 347.
9. CURING SHALL CONFORM TO ACI 308. PROTECT FRESHLY DEPOSITED CONCRETE IMMEDIATELY FROM PREMATURE DRYING, EXCESSIVE HOT OR COLD TEMPERATURES AND EXCESSIVE MOISTURE LOSS FOR A PERIOD NOT LESS THAN 7 DAYS. PROTECT CONCRETE AND FINISHED SURFACES FROM DAMAGING MECHANICAL DISTURBANCES.
10. PROVIDE A SMOOTH FORMED FINISH ON ALL FORMED SURFACES AND A BROOM FINISH ON ALL UNFORMED SLAB SURFACES. ALL SLAB TOLERANCES SHALL MEET ACI 117 REQUIREMENTS.

GEOSYNTHETICS

1. SEE "CQA/CQC PLAN – TAUM SAUK PUMPED STORAGE FACILITY UPPER RESEVOIR RELINING PROJECT" FOR GEOSYNTHETICS MATERIAL AND INSTALLATION REQUIREMENTS AND QUALITY CONTROL/ QUALITY ASSURANCE PROCEDURES.

OTHER NOTES

1. SEE SCHEDULE OF MATERIALS FOR SPECIFICATIONS OF OTHER MATERIALS.
2. ALL PRODUCTS SHALL BE INSTALLED PER MANUFACTURER'S INSTALLATION INSTRUCTIONS.
3. STAINLESS STEEL BATTENS SHALL BE CONTINUOUS SUPPORT TO LINER. BATTENS SHALL BUTT AGAINST EACH OTHER WITHOUT A GAP. BATTEN CANTILEVER FROM ANCHOR BOLT SHALL NOT EXCEED 6 INCHES.
4. CONTRACTOR SHALL BE RESPONSIBLE FOR DESIGN AND INSTALLATION OF TEMPORARY PLATFORMS AND SUPPORTS REQUIRED FOR INSTALLATION OF LINER SYSTEM.
5. CONTRACTOR SHALL TAKE ALL PRECAUTIONS SO AS NOT TO DAMAGE THE EXISTING STRUCTURES DURING INSTALLATION OF LINER SYSTEM. ANY DAMAGE INCURRED SHALL BE REPAIRED AT CONTRACTOR'S EXPENSE.

NOTICE OF LIMITED RESPONSIBILITY
THE RESPONSIBILITY OF THE UNDERSIGNED ENGINEER IS LIMITED TO THE DESIGN WORK SHOWN ON PLANS, DRAWINGS AND DOCUMENTS BEARING HIS/HER SEAL, SIGNATURE OR INITIALS. HE/SHE DOES NOT HAVE AUTHORITY OVER THE PROJECT AS A WHOLE. THE UNDERSIGNED DISCLAIMS ANY RESPONSIBILITY FOR WORK DONE ON THE PROJECT AT LARGE AND FOR WORK DONE ON ANY PORTION OF THE PROJECT WHICH DOES NOT BEAR HIS/HER SEAL, SIGNATURE OR INITIALS.

PREPARED BY: Shaw EMCON/OWT, Inc.

DRAWN: D. STERLE	SIDE SLOPE RELINING	
CHKD: A. LARKY	DETAILS - III, SPECIFICATIONS & SCHEDULES	
SUPV: N/A		
APPD: A. LARKY 12/26/01	LOCATION 061010	8304-X-155099 — CLASS
Ameren	ST. LOUIS MISSOURI	TAUM SAUK UPPER RESERVOIR TAUM SAUK, MISSOURI — REV NO. 5

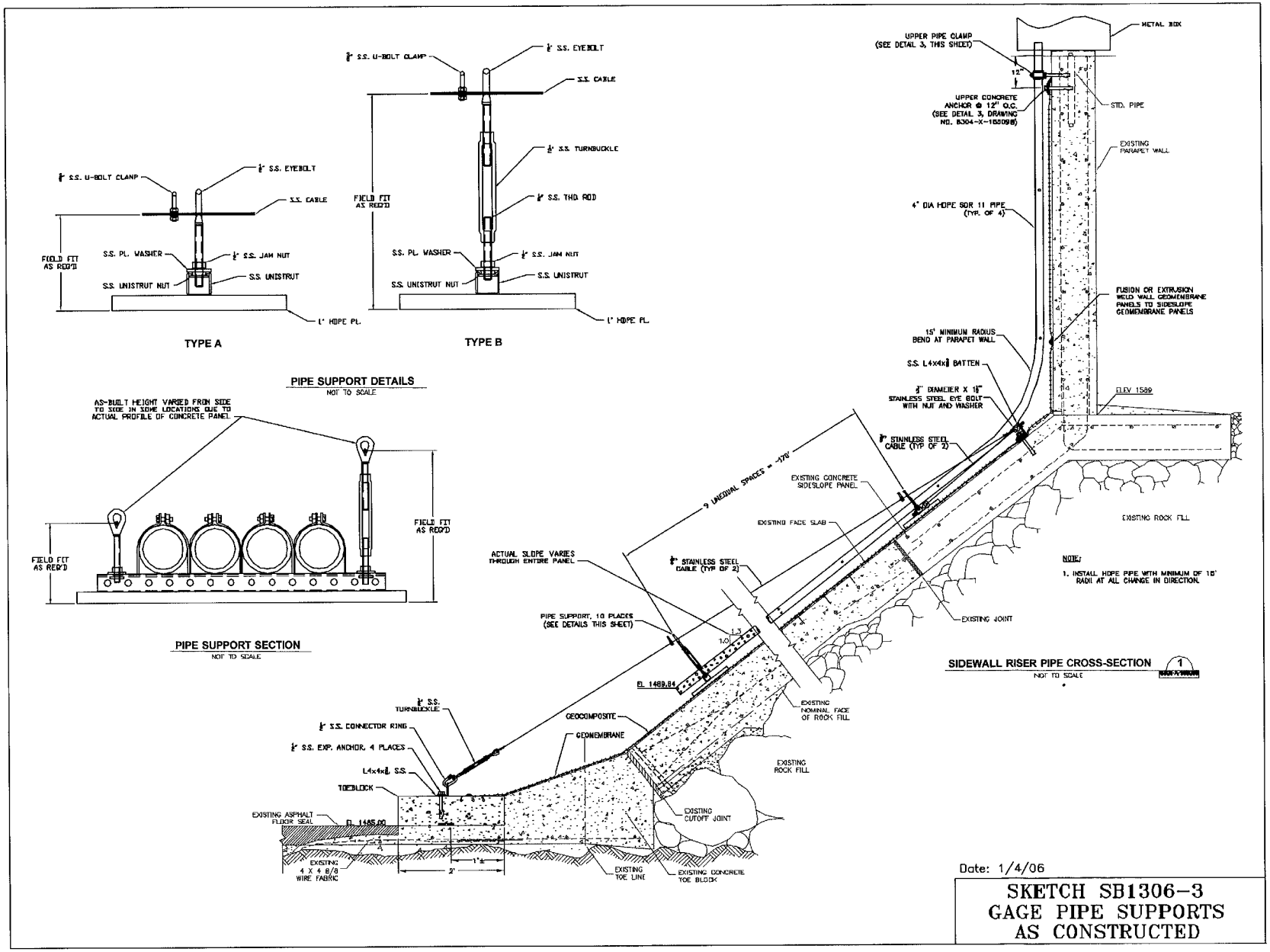
TYPE A
TYPE B
PIPE SUPPORT DETAILS
NOT TO SCALE
PIPE SUPPORT SECTION
NOT TO SCALE
SIDEWALL RISER PIPE CROSS-SECTION
NOT TO SCALE
NOTE:
1. INSTALL HDPE PIPE WITH MINIMUM OF 15' RADII AT ALL CHANGE IN DIRECTION.
Date: 1/4/06
SKETCH SB1306-3
GAGE PIPE SUPPORTS
AS CONSTRUCTED

PRINT DIST.	
REVISIONS	
REV. 0	W.O. DATE 12/26/01 — ISSUED FOR REGULATORY APPROVAL
REV. 1	W.O. DATE 03/07/02 — REVISED PER COMMENTS
REV. 2	W.O. DATE 04/11/02 — REVISED PER FIELD CHANGES
REV. 3	W.O. DATE 09/18/03 — REVISED PER FIELD ACTIVITIES
REV. 4	W.O. DATE 08/06/04 — ADDED WELD TO WALL, REVISED GEOMEMBRANE AND GEOCOMPOSITE AND LOWERED LOWER BATTEN

SCHEDULE OF MATERIALS

ITEM	MANUFACTURER	PRODUCT
GEOMEMBRANE	GSE LINING TECHNOLOGY, INC.	80 MIL HD TEXTURED GEOMEMBRANE
~~NONWOVEN GEOTEXTILE~~	~~GSE LINING TECHNOLOGY, INC.~~	~~NONWOVEN POLYPROPYLENE GEOTEXTILE NW16~~
~~GEONET~~	~~GSE LINING TECHNOLOGY, INC.~~	~~HYPERNET HF~~
~~WOVEN GEOTEXTILE~~	~~HUESKER OR SYNTHETIC INDUSTRIES~~	~~COMTRAC 200 OR DEGTEX 18 X 9~~
ANCHOR BOLT (TYPE A)	HILTI	KWIK BOLT II, 1" DIAMETER, AISI 304 STAINLESS STEEL (WITH STAINLESS STEEL WASHERS)
ANCHOR BOLT (TYPE B)	HILTI	KWIK BOLT II, 1" DIAMETER, AISI 304 STAINLESS STEEL (WITH STAINLESS STEEL WASHERS)
BATTEN (ANGLE)	–	1" X 1.5" X 3" ANGLE, AISI STAINLESS STEEL
BATTEN (FLAT)	–	1/8"X 2" FLAT STOCK, AISI STAINLESS STEEL
POWDER ACTIVATED PIN	HILTI OR APPROVED EQUAL	X-DNI GALVANIZED STEEL PIN WITH INTEGRAL WASHER
GASKET	–	NEOPRENE
SILICONE SEAL (FOR WATERSTOP)	GREENSTREAK	LEAKMASTER
WATER STOP	GREENSTREAK	HYDROTITE CJ-0723-3K
POLYLOCK	GSE LINING TECHNOLOGY, INC.	POLYLOCK
HDPE PIPE	CPCHEM	PLEXCO PE-3408
VFPE GEOMEMBRANE	GSE LINING TECHNOLOGY, INC.	(80) MIL TEXTURED ULTRA FRICTIONFLEX GEOMEMBRANE
GEOFOAM	CONTOUR (FOAM) PRODUCTS, INC.	ASTI TYPE IX GEOFOAM
GEOCOMPOSITE	GSE LINING TECHNOLOGY, INC.	DOUBLE-SIDED NONWOVEN POLYPROPYLENE GEOTEXTILE NW8 AND HYPERNET HF

NOTE: CONTRACTOR MAY REQUEST SUSTITUTION OF ANY PRODUCT PROVIDED CONTRACTOR CAN MAKE EQUIVALENCY DEMONSTRATION.

NOTES/SPECIFICATIONS

CONCRETE

1. REMOVE ALL DEBRIS AND DIRT FROM BENEATH SURFACES TO RECEIVE CONCRETE. POWERWASH ALL SURFACES PRIOR TO CONCRETE PLACEMENT.
2. AIR ENTRAINED, NORMAL WEIGHT FIBER REINFORCED CONCRETE SHALL HAVE A MINIMUM COMPRESSIVE STRENGTH ($f'c$) OF 3000 PSI. TYPE II CEMENT MEETING ASTM C150 SHALL BE USED. THE MIX SHALL HAVE A MAXIMUM ALLOWABLE WATER/CEMENT RATIO OF 0.45. AIR CONTENT BETWEEN 2 TO 3%, AND SLUMP BETWEEN 3-5 INCHES. AGGREGATES USED SHALL MEET ASTM C33 AND MAXIMUM SIZE SHALL BE 1". THE CONCRETE SHALL HAVE POLYPROPYLENE FIBERS A MINIMUM OF 33 POUNDS PER CUBIC YARD. ONLY POTABLE WATER SHALL BE USED. CONTRACTOR SHALL SUBMIT CONCRETE MIX DESIGN FOR ENGINEER'S APPROVAL BEFORE CONCRETE PLACEMENT.
3. ANY ADMIXTURE TO BE USED IN CONCRETE SHALL HAVE APPROVAL OF THE ENGINEER IN CHARGE PRIOR TO USE. NO ADMIXTURE CONTAINING CALCIUM CHLORIDE WILL BE ACCEPTABLE.
4. ALL REINFORCING BARS TO BE NEW DEFORMED BILLET STEEL PER ASTM A-615 GRADE 60 BARS. ALL WELDED WIRE FABRIC (WWF) TO BE IN ACCORDANCE WITH ASTM A-185. FURNISH WWF IN FLAT SHEETS ONLY. PLACE 2 INCHES BENEATH TOP OF SLAB SURFACE, UNLESS OTHERWISE NOTED.
5. DETAILING OF CONCRETE REINFORCEMENT SHALL BE IN ACCORDANCE WITH ACI 315 "MANUAL OF STANDARD PRACTICE OF DETAILING REINFORCED CONCRETE STRUCTURES". CLEARANCES AS NOTED ON DETAILS ON THIS SHEET.
6. HYDROTITE WATERSTOPS SHALL BE INSTALLED AS SHOWN ON THE DRAWINGS AND SHALL BE CONTINUOUS. WATERSTOPS SHALL BE INSTALLED PER MANUFACTURER'S INSTRUCTIONS USING A SEALANT AS NECESSARY.
7. ALL CONCRETE WORK SHALL BE IN ACCORDANCE WITH THE LATEST EDITION OF ACI 318 "BUILDING CODE REQUIREMENTS FOR REINFORCED CONCRETE".
8. CONTRACTOR SHALL BE SOLELY RESPONSIBLE FOR THE DESIGN AND ENGINEERING OF FORMWORK AS WELL AS ITS CONSTRUCTION. USE SMOOTH FORMS ON ALL SURFACES CONFORMING THE SHAPE LINE AND DIMENSIONS SHOWN. FORM COATING AND REMOVAL SHALL CONFORM TO ACI 347.
9. CURING SHALL CONFORM TO ACI 308. PROTECT FRESHLY DEPOSITED CONCRETE IMMEDIATELY FROM PREMATURE DRYING, EXCESSIVE HOT OR COLD TEMPERATURES AND EXCESSIVE MOISTURE LOSS FOR A PERIOD NOT LESS THAN 7 DAYS. PROTECT CONCRETE AND FINISHED SURFACES FROM DAMAGING MECHANICAL DISTURBANCES.
10. PROVIDE A SMOOTH FORMED FINISH ON ALL FORMED SURFACES AND A BROOM FINISH ON ALL UNFORMED SLAB SURFACES. ALL SLAB TOLERANCES SHALL MEET ACI 117 REQUIREMENTS.

GEOSYNTHETICS

1. SEE "COA/CQC PLAN – TAUM SAUK PUMPED STORAGE FACILITY UPPER RESEVOIR RELINING PROJECT" FOR GEOSYNTHETICS MATERIAL AND INSTALLATION REQUIREMENTS AND QUALITY CONTROL/ QUALITY ASSURANCE PROCEDURES.

OTHER NOTES

1. SEE SCHEDULE OF MATERIALS FOR SPECIFICATIONS OF OTHER MATERIALS.
2. ALL PRODUCTS SHALL BE INSTALLED PER MANUFACTURER'S INSTALLATION INSTRUCTIONS.
3. STAINLESS STEEL BATTENS SHALL BE CONTINUOUS SUPPORT TO LINER. BATTENS SHALL BUTT AGAINST EACH OTHER WITHOUT A GAP. BATTEN CANTILEVER FROM ANCHOR BOLT SHALL NOT EXCEED 6 INCHES.
4. CONTRACTOR SHALL BE RESPONSIBLE FOR DESIGN AND INSTALLATION OF TEMPORARY PLATFORMS AND SUPPORTS REQUIRED FOR INSTALLATION OF LINER SYSTEM.
5. CONTRACTOR SHALL TAKE ALL PRECAUTIONS SO AS NOT TO DAMAGE THE EXISTING STRUCTURES DURING INSTALLATION OF LINER SYSTEM. ANY DAMAGE INCURRED SHALL BE REPAIRED AT CONTRACTOR'S EXPENSE.

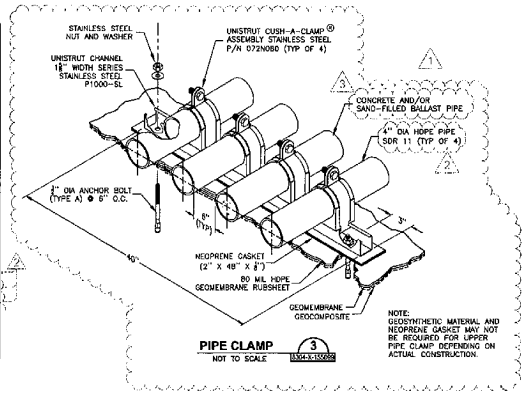

PIPE CLAMP 3 (8304-X-155099)
NOT TO SCALE

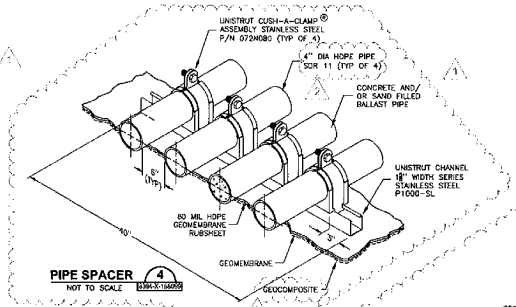

PIPE SPACER 4 (8304-X-155099)
NOT TO SCALE

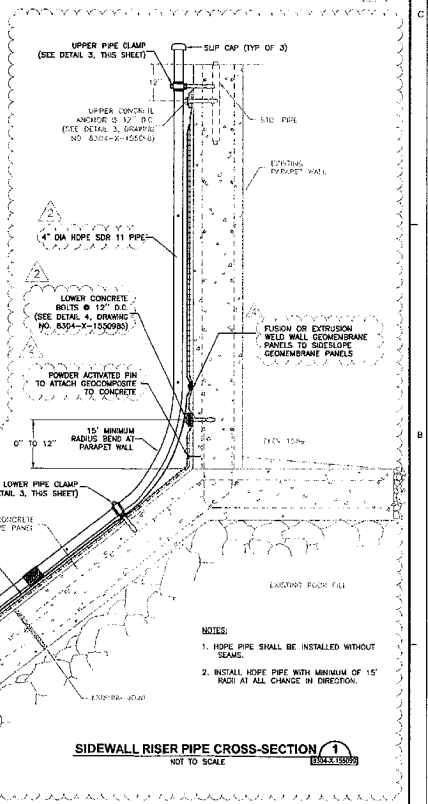

NOTES:
1. HDPE PIPE SHALL BE INSTALLED WITHOUT SEAMS.
2. INSTALL HDPE PIPE WITH MINIMUM OF 15' RADII AT ALL CHANGE IN DIRECTION.

SIDEWALL RISER PIPE CROSS-SECTION 1 (8304-X-155099)
NOT TO SCALE

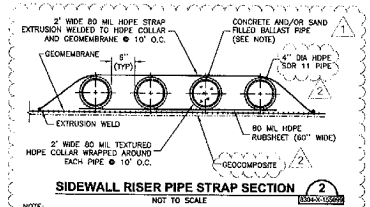

SIDEWALL RISER PIPE STRAP SECTION 2 (8304-X-155099)
NOT TO SCALE

NOTE:
1. ALTERNATIVE PIPE BALLAST SYSTEMS SUCH AS AS CONCRETE COLLARS MAY BE USED PROVIDED A MINIMUM BALLAST WEIGHT OF 9 LBS/FT OF PIPE IS PROVIDED.

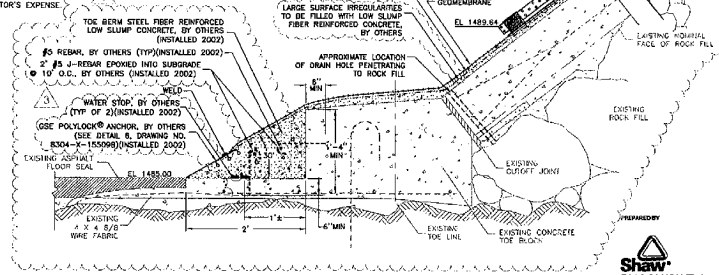

NOTICE OF LIMITED RESPONSIBILITY
THE RESPONSIBILITY OF THE UNDERSIGNED FIRM(S) RELATED TO THE DESIGN WORK SHOWN ON PROJECT DRAWINGS AND DOCUMENTS IS LIMITED TO THE DESIGN WORK SHOWN ON THE PROJECT DRAWINGS AND DOCUMENTS BEARING THEIR SEAL, SIGNATURE AND/OR INITIALS. THE UNDERSIGNED DISCLAIMS ANY RESPONSIBILITY FOR WORK DONE UNDER SUBSEQUENT REVISIONS TO THE DRAWINGS AND DOCUMENTS UNLESS THE UNDERSIGNED HAVE BEEN ASSIGNED AND ASSUME RESPONSIBILITY FOR SUCH REVISIONS.

PREPARED BY
Shaw® EMCON/OWT, Inc.

DRAWN: D. STEELE	SIDE SLOPE RELINING DETAILS - III, SPECIFICATIONS & SCHEDULES		
CHKD: A. LARKY			
SUPV: N/A			
APVD: A. LARKY 12/26/01	LOCATION 00/0/0	8304-X-155099	CLASS
Ameren	ST. LOUIS MISSOURI	TAUM SAUK UPPER RESERVOIR TAUM SAUK, MISSOURI	REV NO. 4