Impacts of Corrective Switching

Paula Lipka, Anya Castillo, John-Paul Watson,
Richard O'Neill, Shmuel Oren

June 24, 2014

Outline

- Introduction
- DC Example: Fixing line violations
- AC Example: 2 Bus Network
- AC Example: 3 Bus Network
- Conclusion

What can go wrong in the power system?

Generator Outages

Line Outages

What Happens?

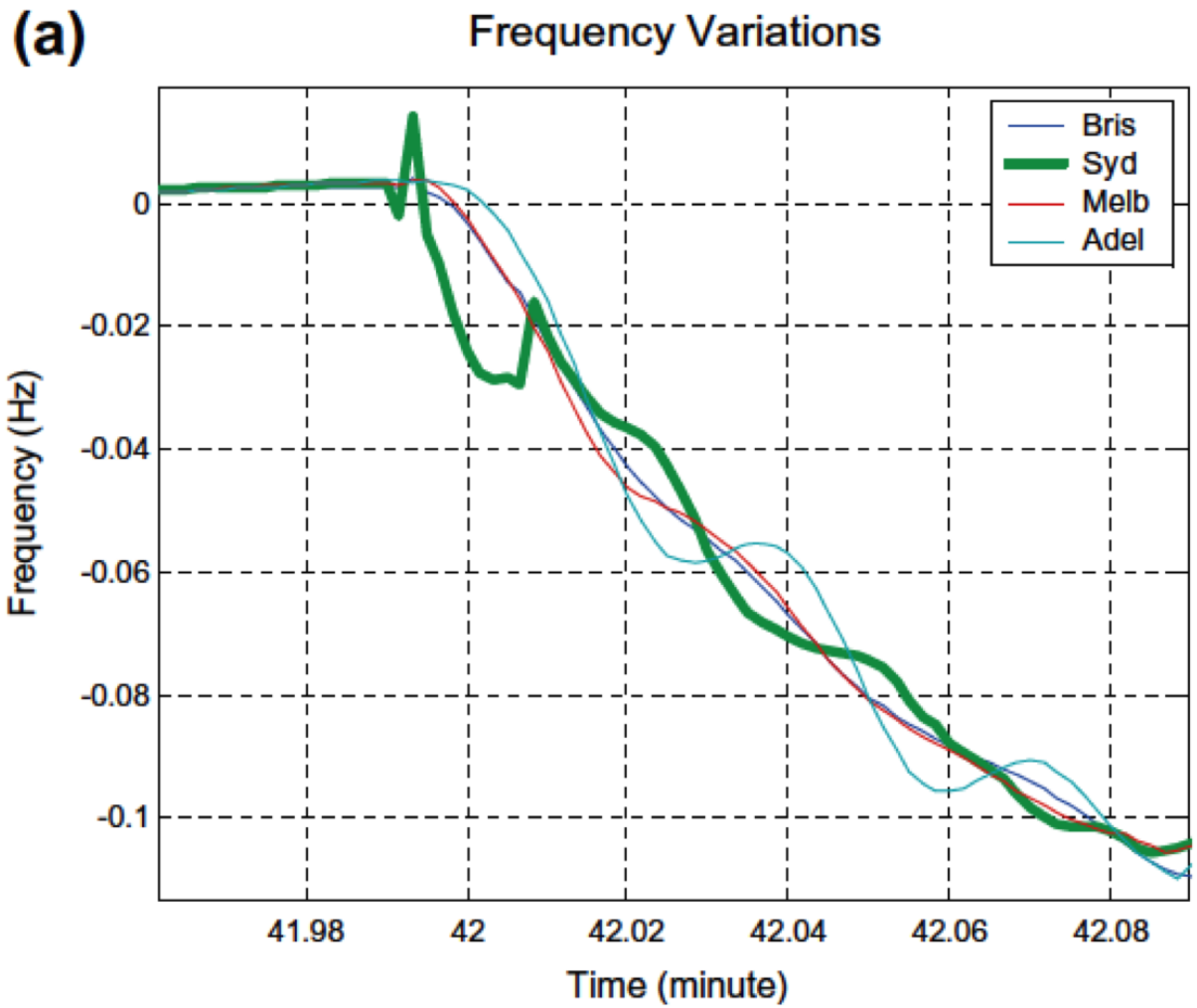

Figure : Ford [1]

What Other Problems Can Occur?

- Under/over voltage
- Load shedding
- Line overloading
- Transient instability of power or voltage

Resolving Contingencies and Other Problems

Considerations:

- Transient stability
- When to enforce security constraints
- Minimize load shed or total energy cost?

Strategies:

- FACTS devices (series)
- Shunt capacitance/inductance (parallel)
- Redispatch generation
- Phase angle
- Corrective Switching

Resolving Contingencies

Considerations:

- Transient stability
- When to enforce security constraints
- Minimize load shed or total energy cost?

Strategies:

- FACTS devices (series)
- Shunt capacitance/inductance (parallel)
- Redispatch generation
- Phase angle
- Corrective Switching

What is Corrective Switching?

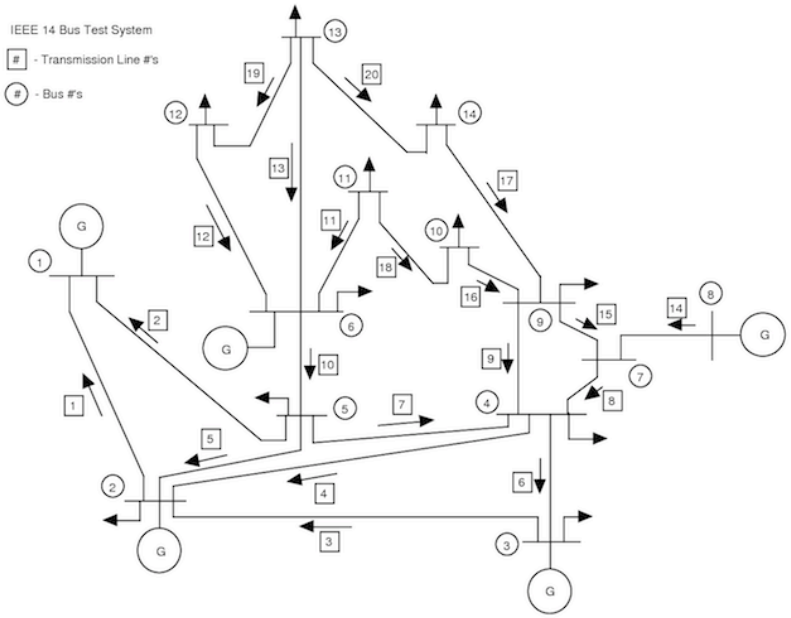

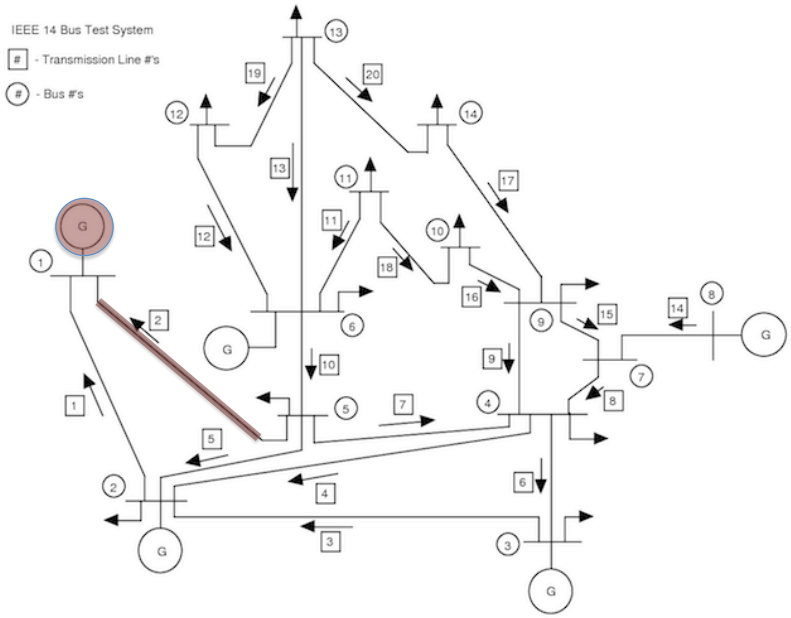

Questions....

- How does an outage change the network solution?
- How does corrective switching help?

Outline

- Introduction
- DC Example: Fixing line violations
- AC Example: 2 Bus Network
- AC Example: 3 Bus Network
- Conclusion

DC with Line Limits: Is Redispatch Enough?

All generators have $P_g^{max} > 100$ MW. Generator C is the cheapest; A and B are the same price.
All lines have equal impedance

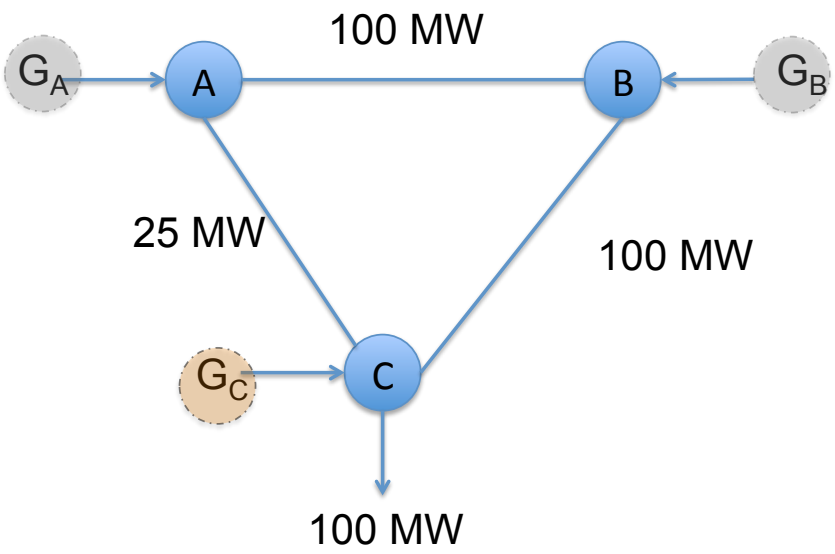

Line Limits on Power Transfer

A-B: $-100 \leq \frac{1}{3}G_A - \frac{1}{3}G_B \leq 100$

B-C: $-100 \leq \frac{1}{3}G_A + \frac{2}{3}G_B \leq 100$

A-C: $-25 \leq \frac{2}{3}G_A + \frac{1}{3}G_B \leq 25$

DC with Line Limits: Is Redispatch Enough?

Contingency: Lose Generator C

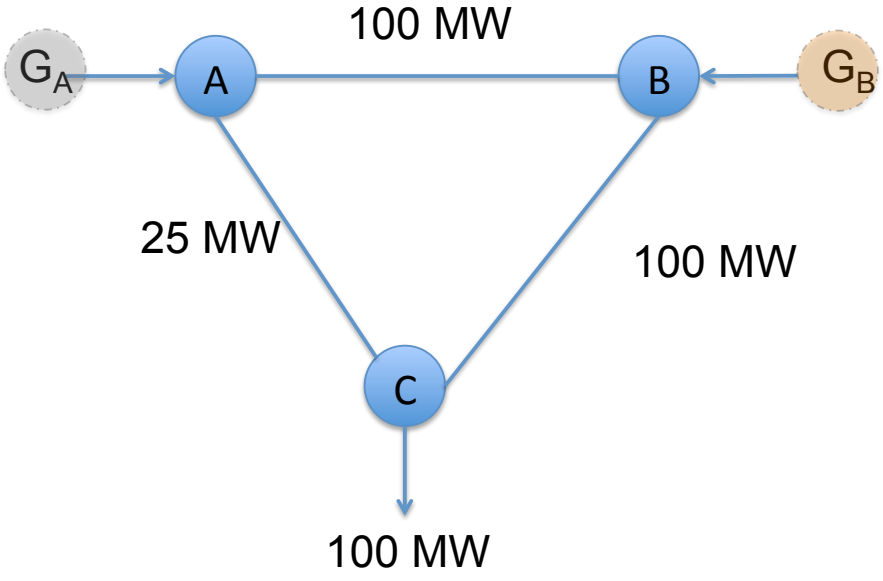

With Redispatch Only:

Due to constraint on line A-C:
Maximum power is when
G_B=75MW

Minimum load shed 25 MW

DC with Line Limits: Required Redispatch plus Corrective Switching

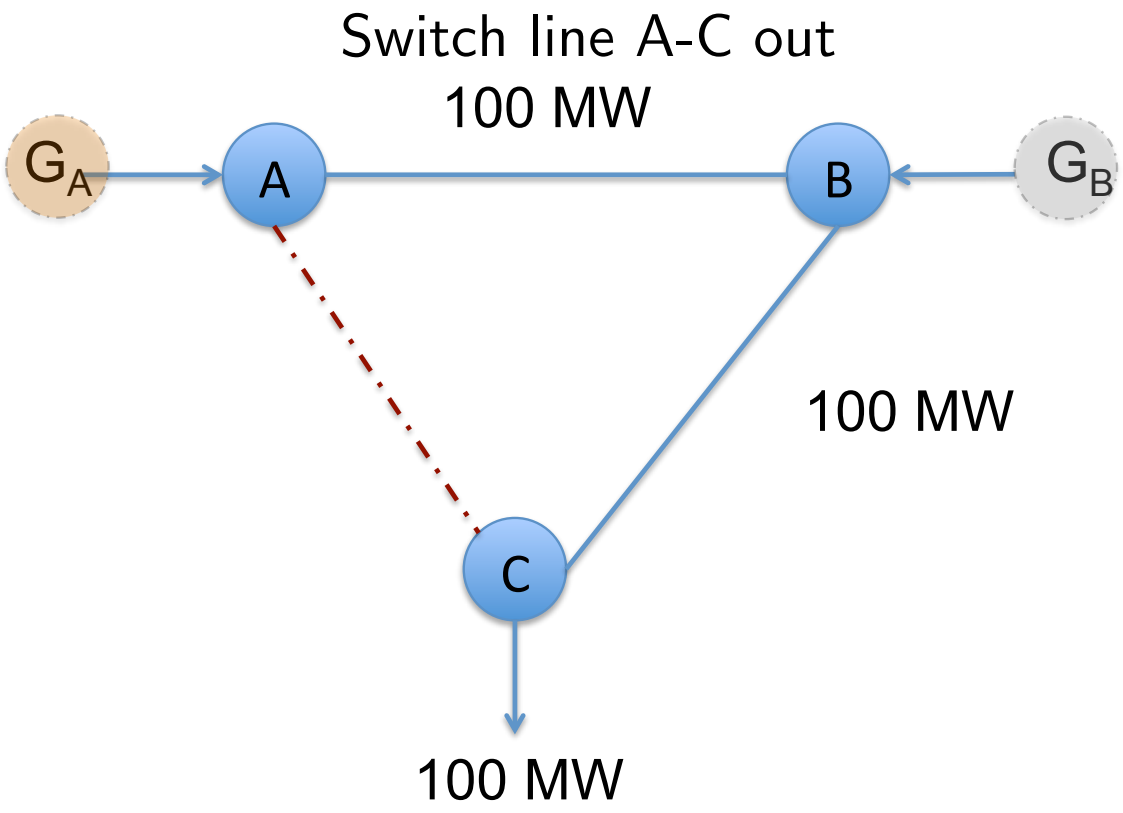

Switch line A-C out

Now, G_A=100MW; no load shed required

Outline

- Introduction
- DC Example: Fixing line violations
- AC Example: 2 Bus Network
- AC Example: 3 Bus Network
- Conclusion

Two Bus Network, at Normal Load

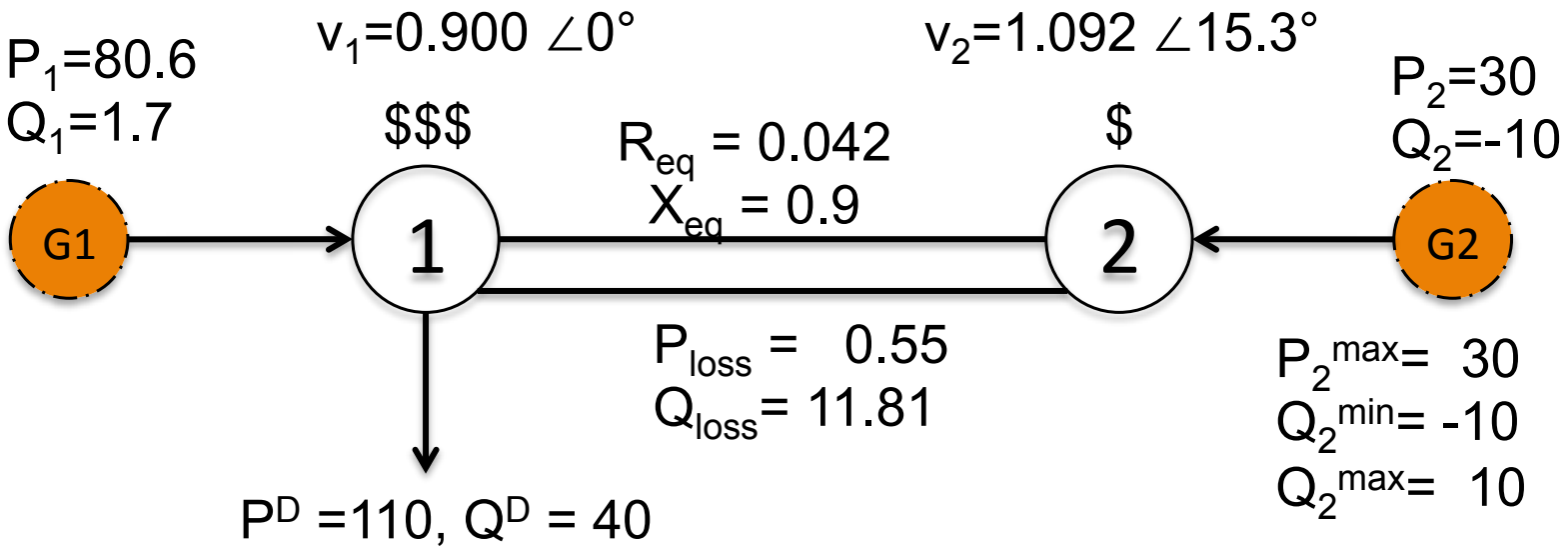

2 Bus Network, as Load Decreases: Power

Real Power Generation

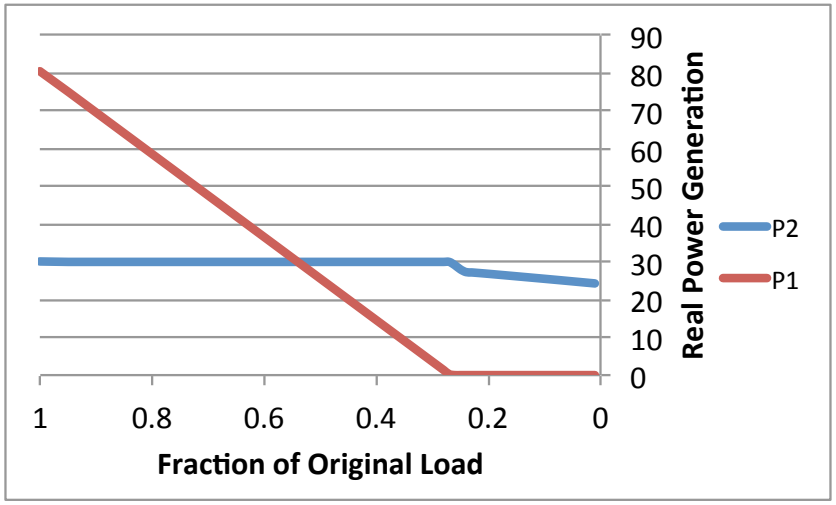

Reactive Power Generation

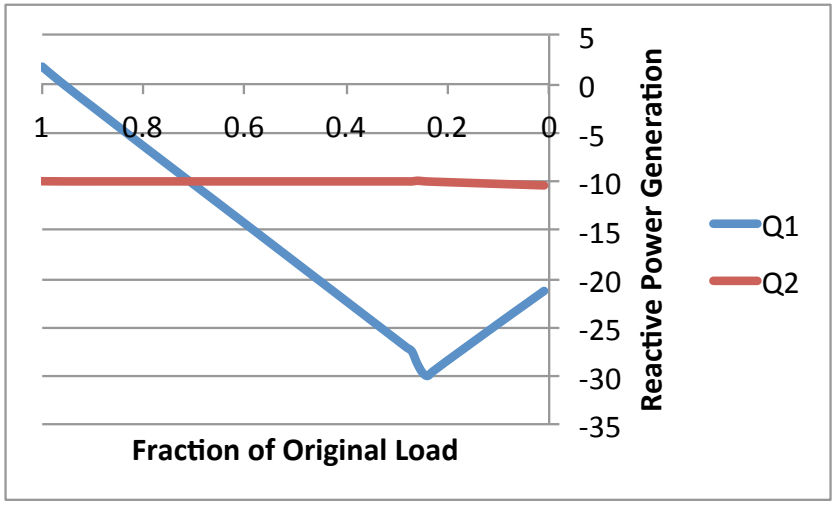

2 Bus Network, as Load Decreases: Voltage

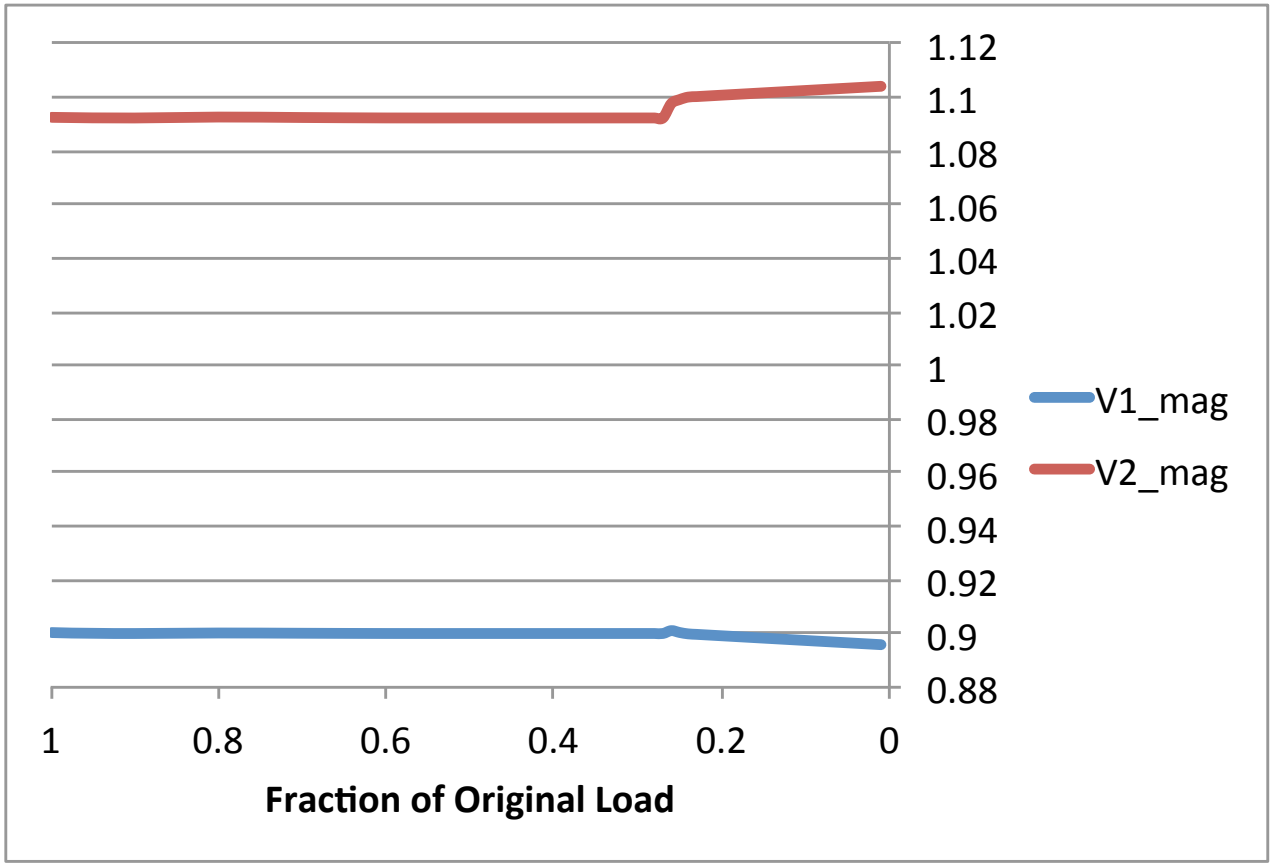

Angle difference stays at 15.3° until $p_D < 28$.
Minimum and maximum voltage violations!

2 Bus Network: Does Corrective Switching Help?

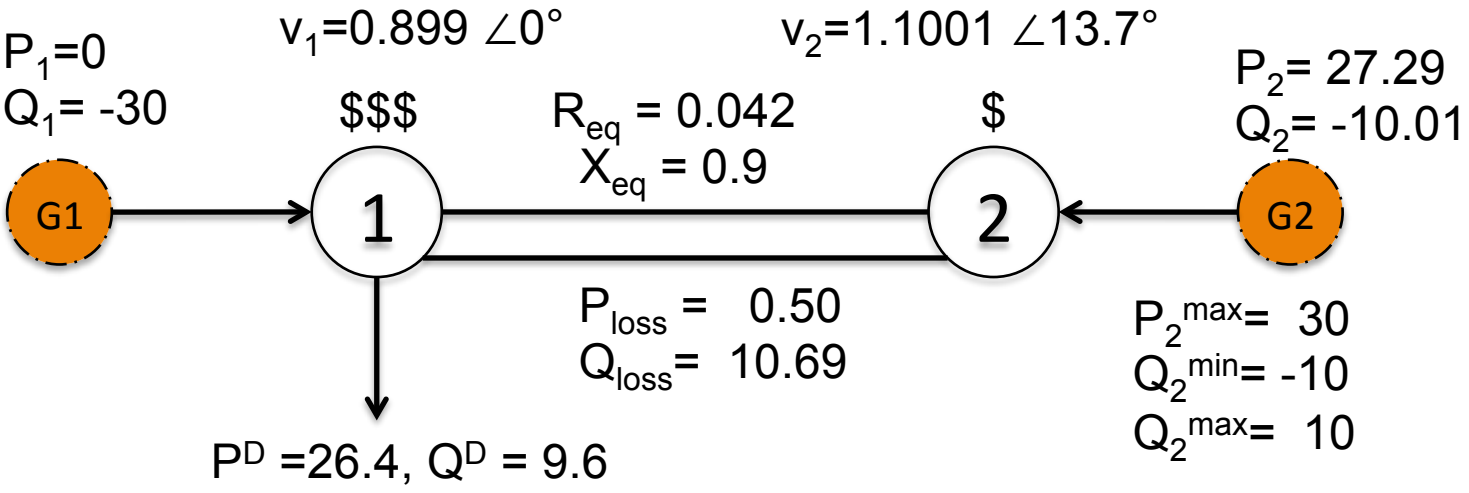

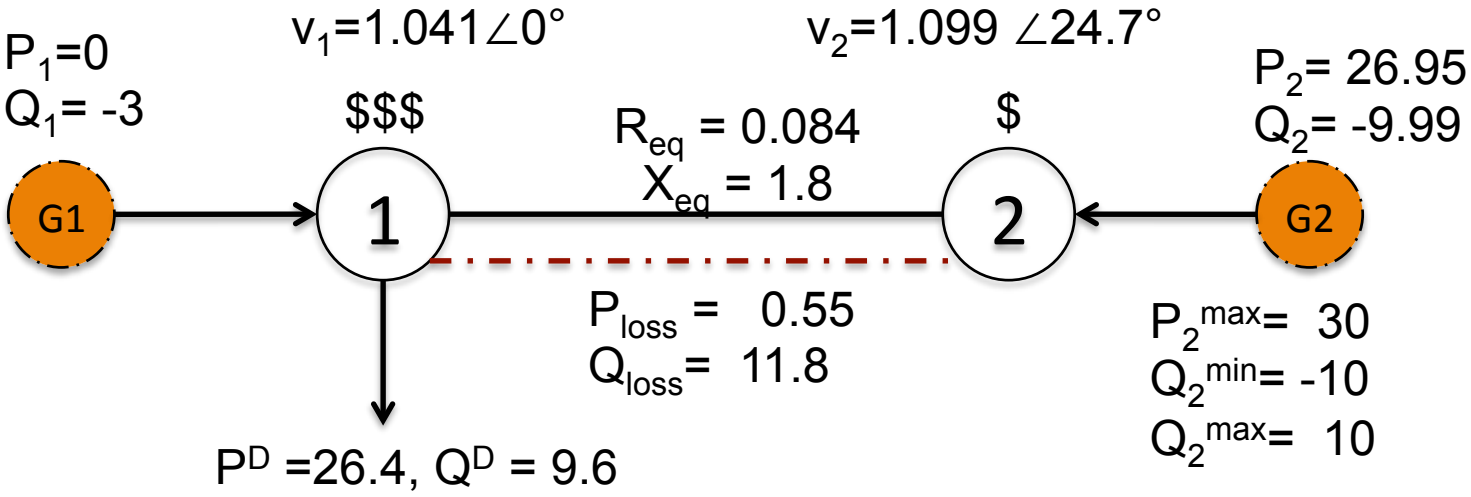

2 Bus Network: Behavior With and Without Corrective Switching

Voltage Magnitude

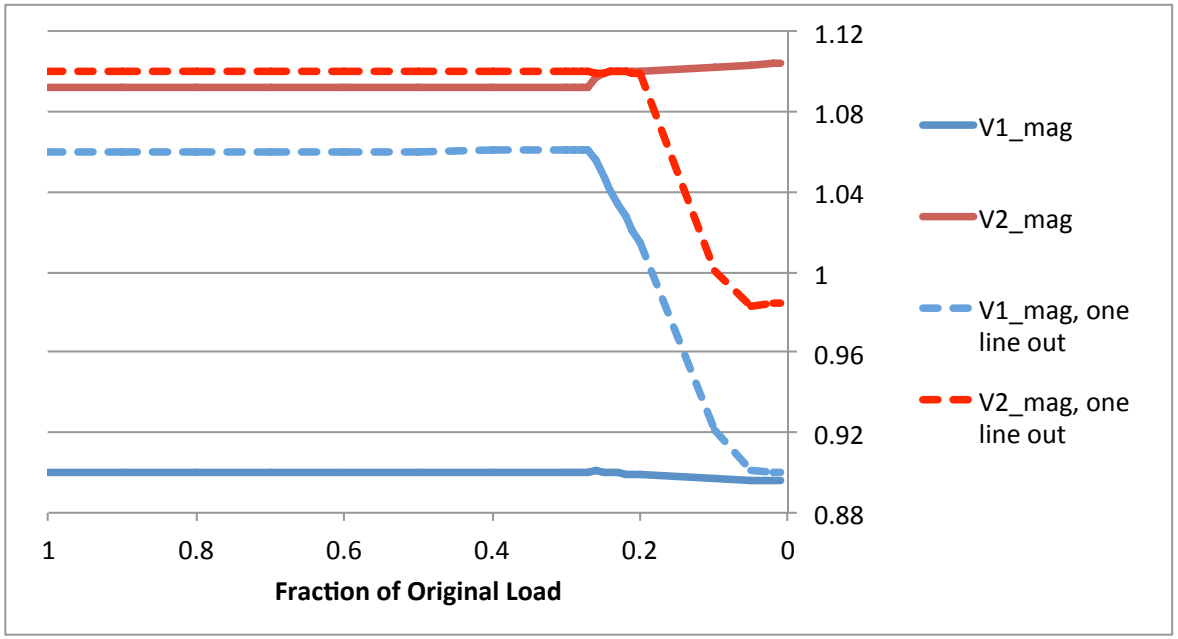

Voltage Angle

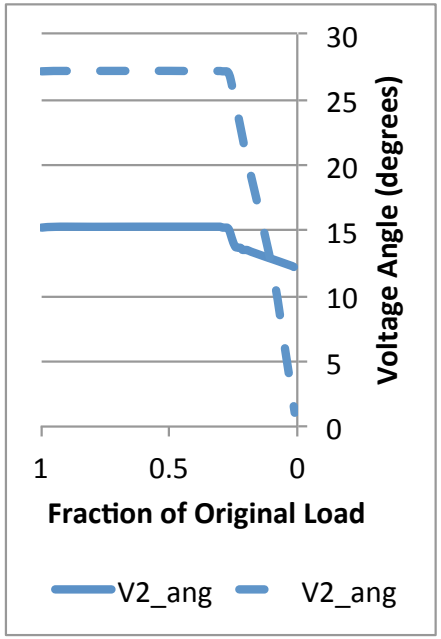

Corrective switching reduces the voltage magnitude difference, allowing the voltages to stay within bounds.

Outline

- Introduction
- DC Example: Fixing line violations
- AC Example: 2 Bus Network
- AC Example: 3 Bus Network
- Conclusion

3 Bus Network: Generator Contingency

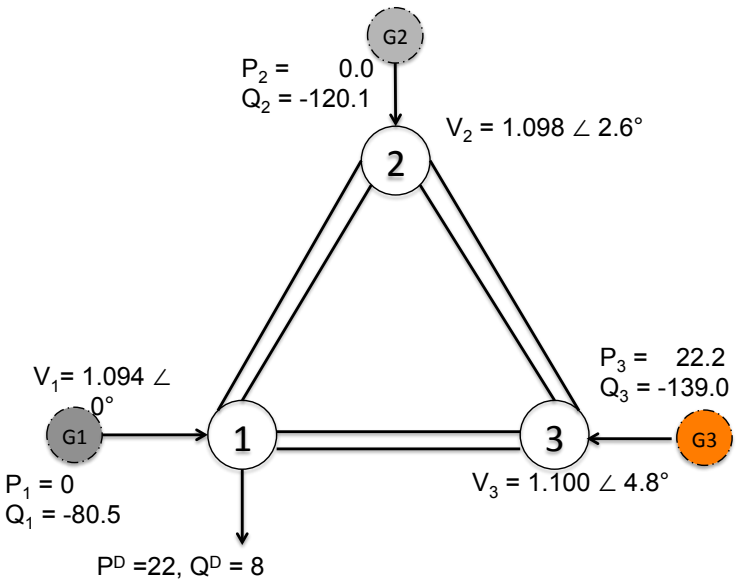

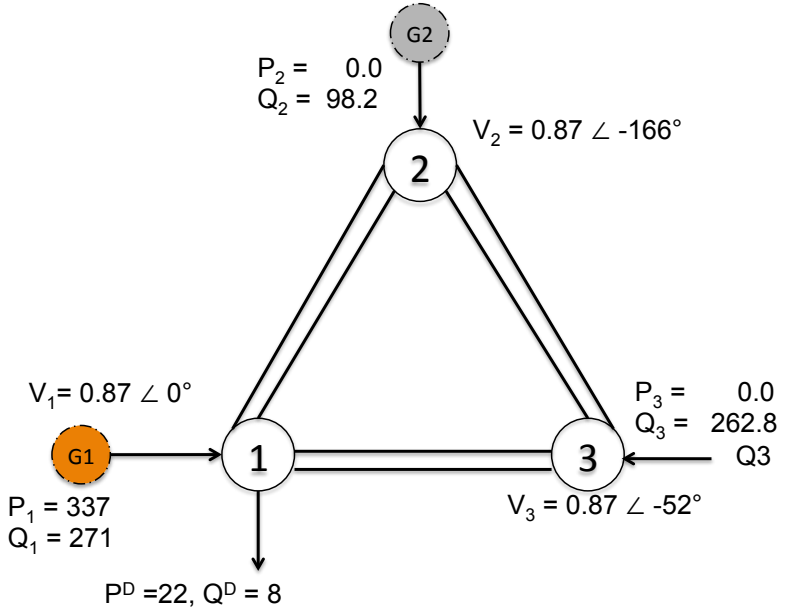

Voltage violations and nonsensical dispatch when real power cannot be produced at bus 3!

3 Bus Network: Corrective Switching with One Line

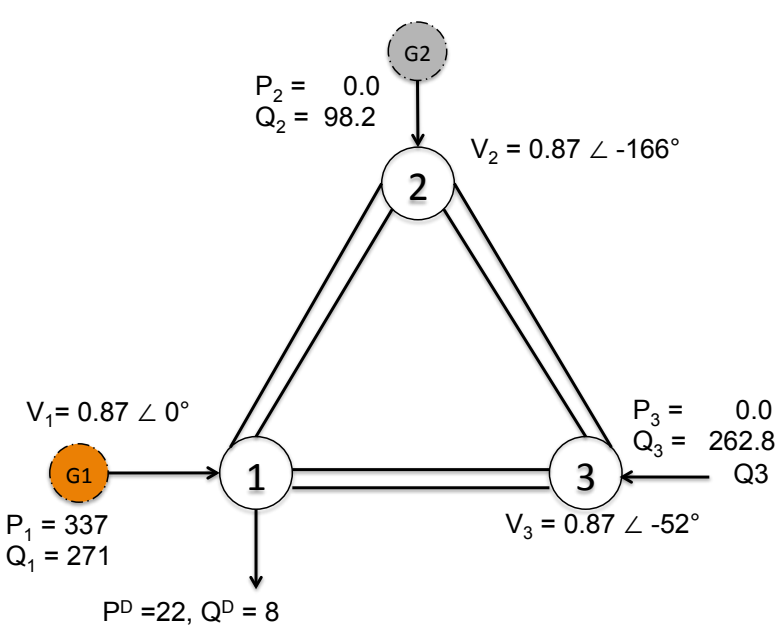

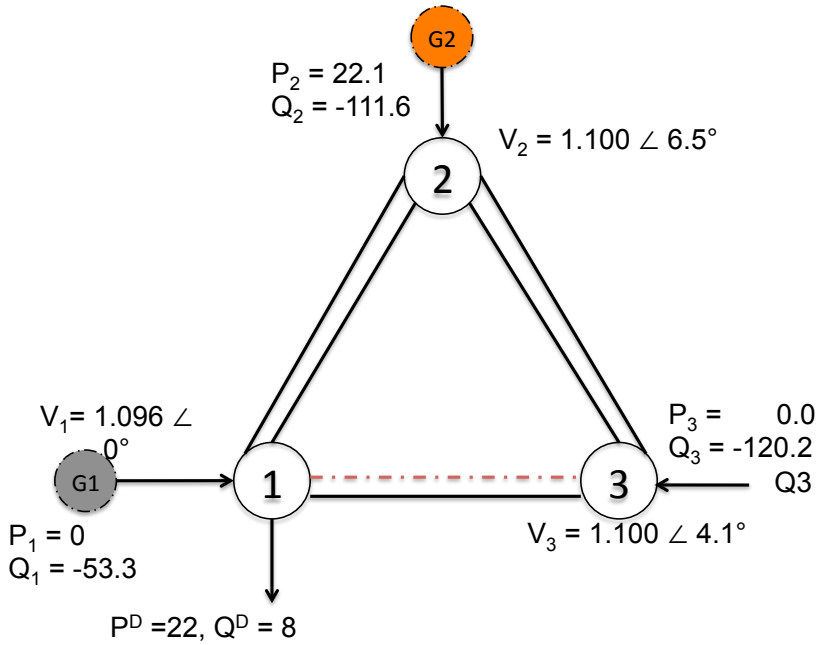

By removing one line, the voltage at each bus is raised. Reactive power with corrective switching is lower than in the pre-contingency case.

3 Bus Network: Corrective Switching with Two Lines (One Connection)

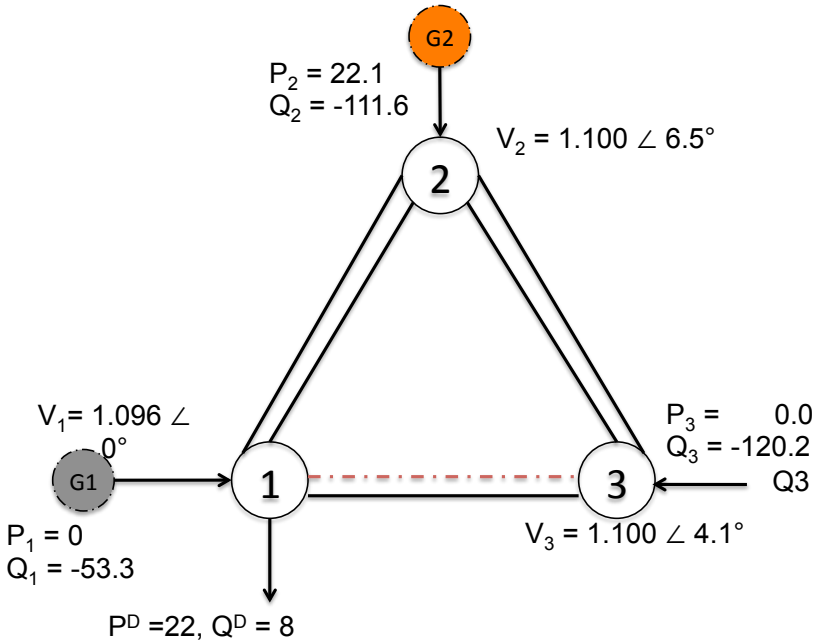

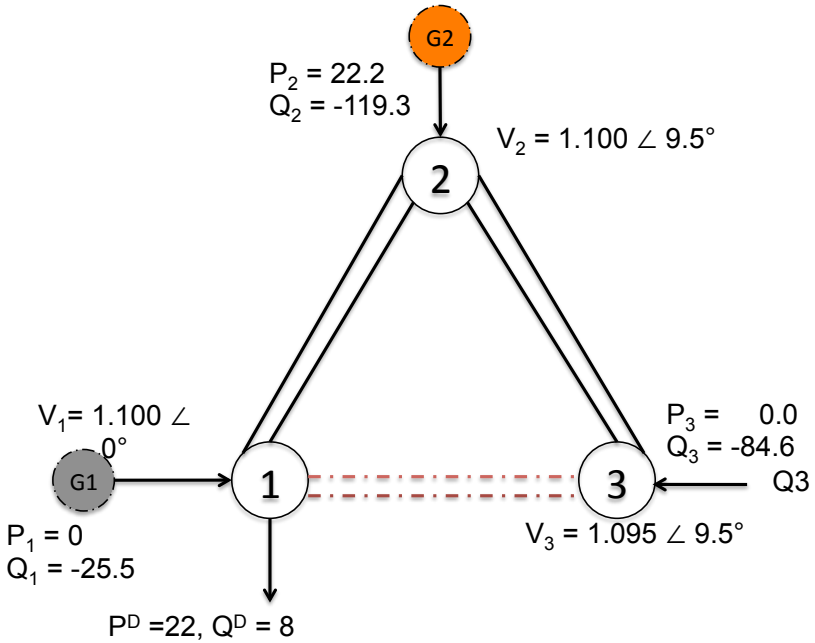

Removing an additional line increases the voltage angle difference between 1 and 2 and 1 and 3. Reactive power drops at nodes 1 and 3.

Conclusion

Switching out a line has a number of effects . . .

- Modifying the admittance of the network
- Change voltage magnitude
- Change voltage angle

Sources I

- J. Ford, H. Bevrani, and G. Ledwich, "Adaptive load shedding and regional protection," *International Journal of Electrical Power & Energy Systems*, vol. 31, no. 10, pp. 611 – 618, 2009. [Online]. Available: http://www.sciencedirect.com/science/article/pii/S014206150900091X
- J. Momoh, M. Elfayoumy, and W. Mittelstadt, "Value-based reliability for short term operational planning," *IEEE Transactions on Power Systems*, vol. 14, no. 4, pp. 1533–1542, Nov 1999.

Sources II

- F. Capitanescu, J. M. Ramos, P. Panciatici, D. Kirschen, A. M. Marcolini, L. Platbrood, and L. Wehenkel, "State-of-the-art, challenges, and future trends in security constrained optimal power flow," *Electric Power Systems Research*, vol. 81, no. 8, pp. 1731 – 1741, 2011. [Online]. Available: http://www.sciencedirect.com/science/article/pii/S0378779611000885
- C. Liu, J. Wang, and J. Ostrowski, "Heuristic prescreening switchable branches in optimal transmission switching," *IEEE Transactions on Power Systems*, vol. 27, no. 4, pp. 2289–2290, Nov 2012.