SIEMENS

FERC Voltage Coordination Workshop

Voltage Analysis Applications

December 1, 2011

Dan French
Siemens Smart Grid Division, Energy Automation

Copyright © Siemens Energy, Inc. 2010. All rights reserved.

SIEMENS

Overview

- Voltage Analysis and Control Applications Today
- Example Deployments
- On-going Development

Copyright © Siemens Energy, Inc. 2011. All rights reserved.

Vertically Integrated Solutions

SIEMENS

Hierarchical Control and Optimization

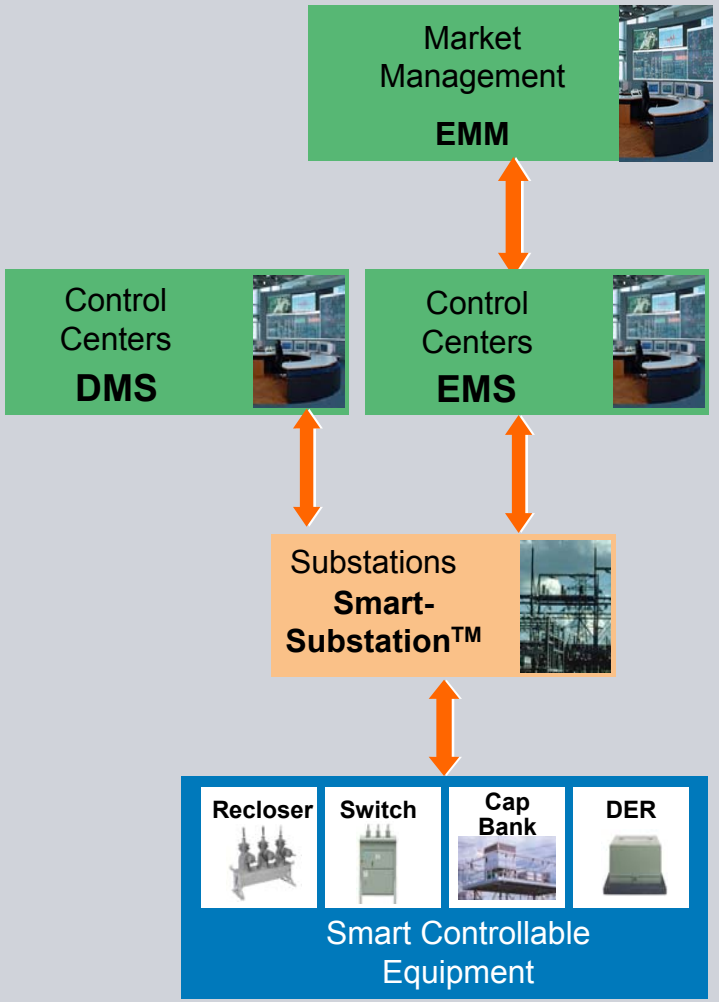

Market Clearing Day Ahead and Real-time

Advanced Analysis and Management

Intelligent Delivery and Condition Management

Coordinated Intelligent Field Decisions

Copyright © Siemens Energy, Inc. 2011. All rights reserved.

Voltage Control and Analysis Applications

SIEMENS

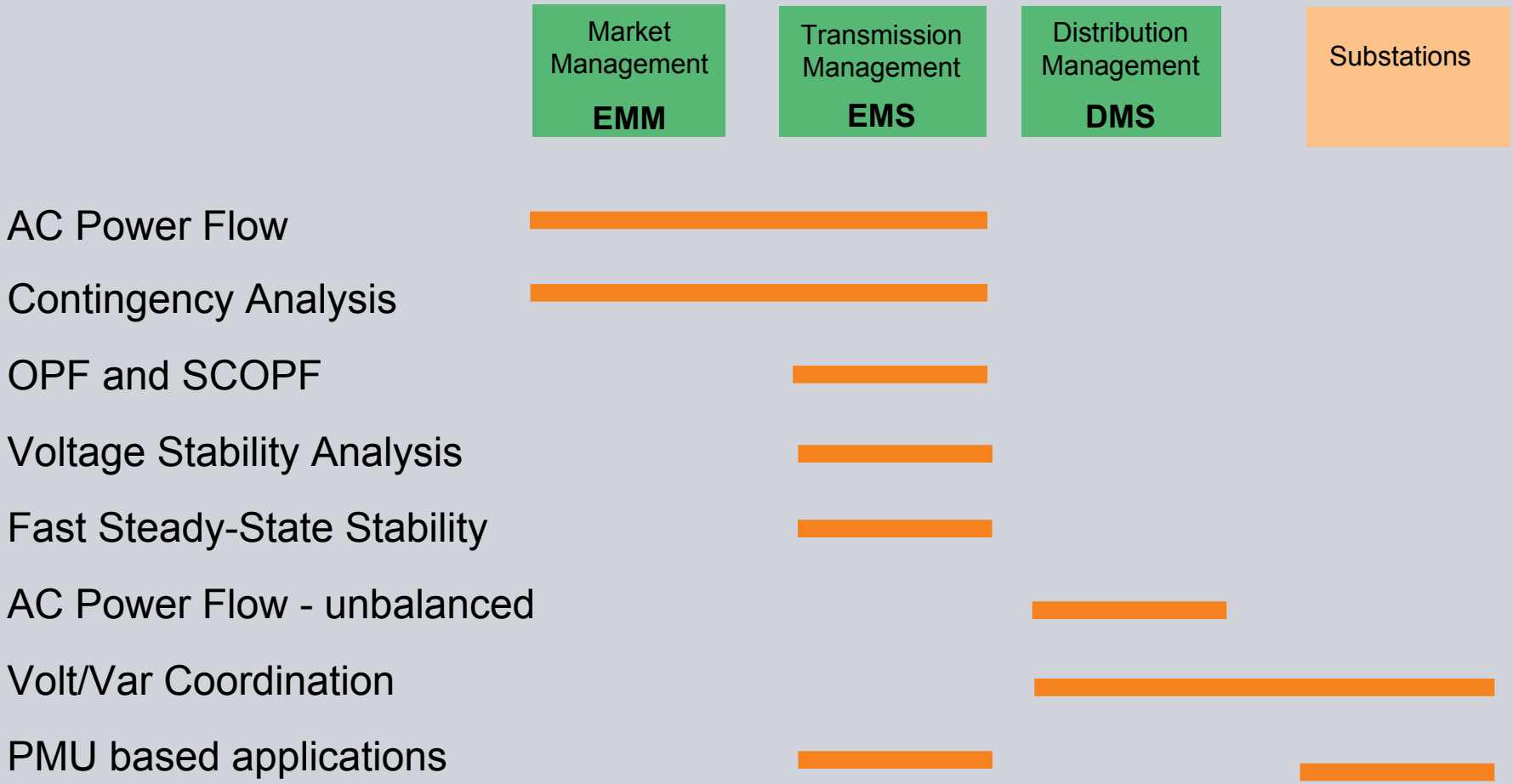

Copyright © Siemens Energy, Inc. 2011. All rights reserved.

Deployment of Voltage Management Application

SIEMENS

- Closed loop voltage control
- Transfer Limit Calculator
- Security Constrained Unit Commitment/Economic Dispatch
- Distribution Network Volt-Var Coordination
- Distribution Network Hierarchical Volt-Var Coordination

Copyright © Siemens Energy, Inc. 2011. All rights reserved.

MAVIR Automatic Voltage Control

The Hungarian Power System is part of the UCTE system. The base grid in Hungary consists of the 220 kV and above transmission network. MAVIR controls, operates and develops the high voltage network - 750 kV, 400 kV, 220 kV and parts of the 120 kV. MAVIR controls but does not own power plants on the system. Six regional utility companies own the network of the 120 kV and below. MAVIR operates an Automatic Voltage Control system to manage voltage and reactive power dispatch.

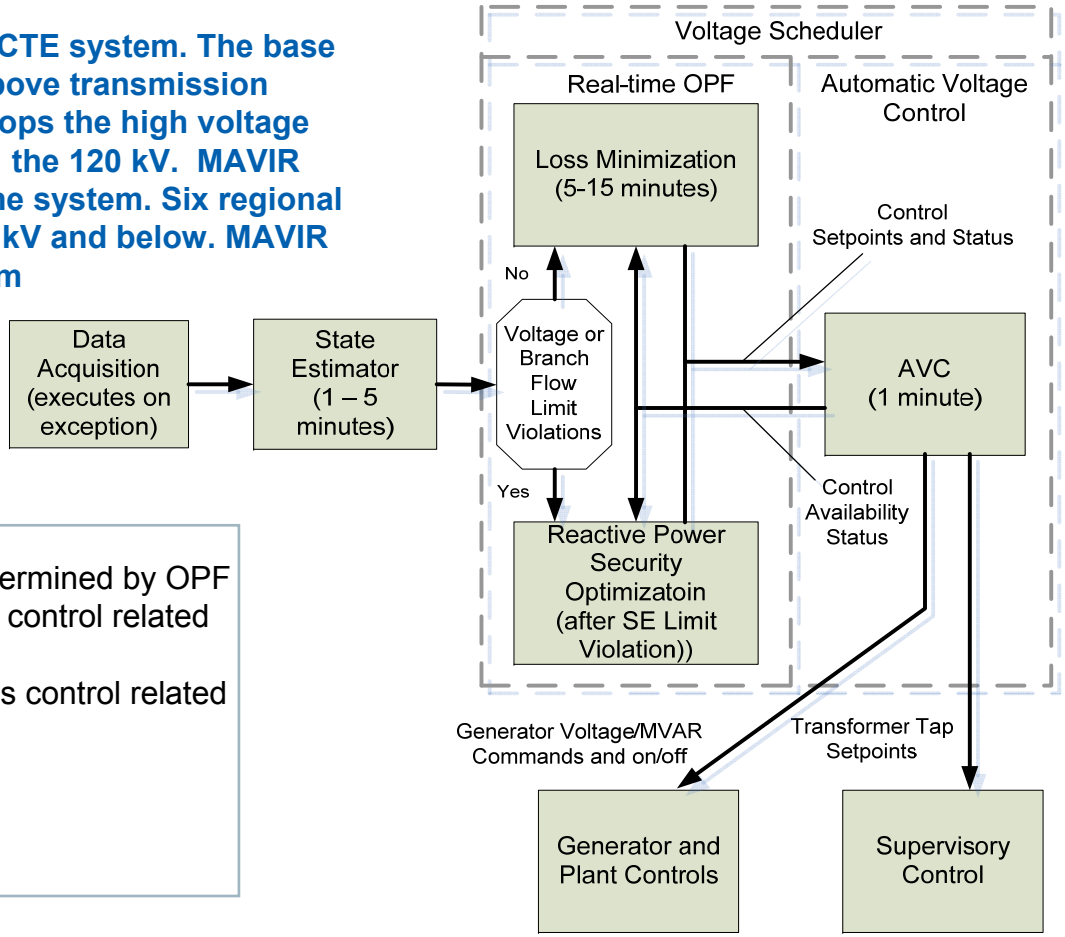

Key features

- Setpoints and tap positions determined by OPF
- AVC-U manages and performs control related to generating units and plants
- AVC-S - manages and performs control related to LTC's and VCC/VCR.

Copyright © Siemens Energy, Inc. 2011. All rights reserved.

PJM AC2 Transfer Limit Calculation

The PJM Advanced Control Center project has been commissioned with the Transfer Limit Calculation (TLC) application. TLC Transfer Limit Calculation determines pre- and post-contingency margins across power transfer interfaces. TLC loads the system to a level where transmission facilities encounter operating limits, voltage drop or voltage collapse. The base case and a set of contingencies are evaluated. Transfer interface limits are evaluated against actual flows.

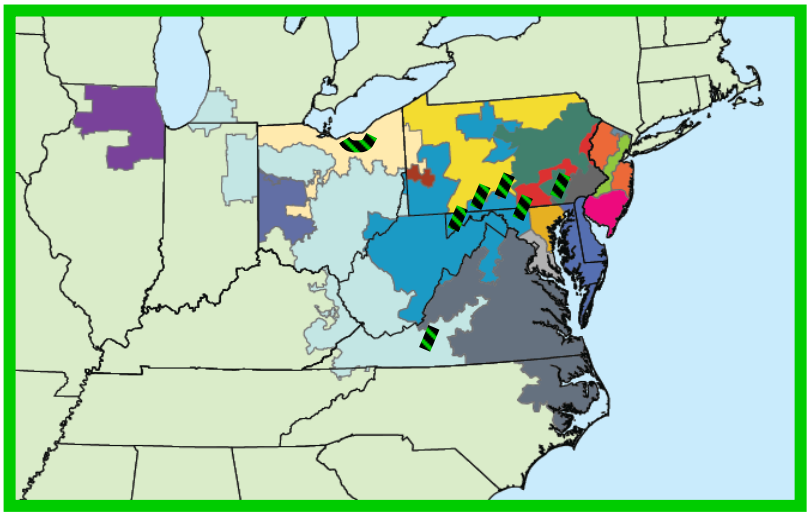

Key features

- Evaluates multiple interfaces per execution
- Checks voltage drop and bus voltage limits
- Transfer Limit determined at the point where voltage drop limit , bus voltage limit or voltage collapse point occurs

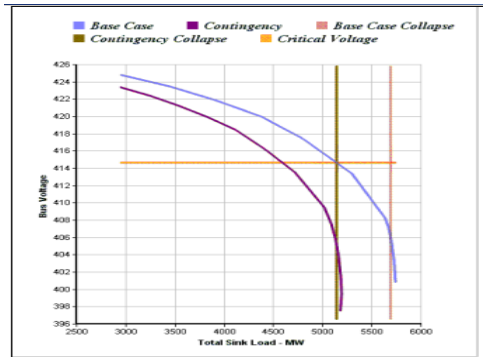

Copyright © Siemens Energy, Inc. 2011. All rights reserved.

California ISO
Shaping a Renewed Future

SIEMENS

CAISO Market System

The CAISO Market Management System clears the Day Ahead and Real-time Market. Market runs are evaluated for economics and reliability. Economic generation schedules are passed to transmission network applications for evaluation against transmission limits. Transmission constraints and associated generation sensitivities are returned to Unit Commitment for re-evaluation. Real-time pre-dispatch evaluation is performed for several time intervals 2-4 hours prior to real-time dispatch.

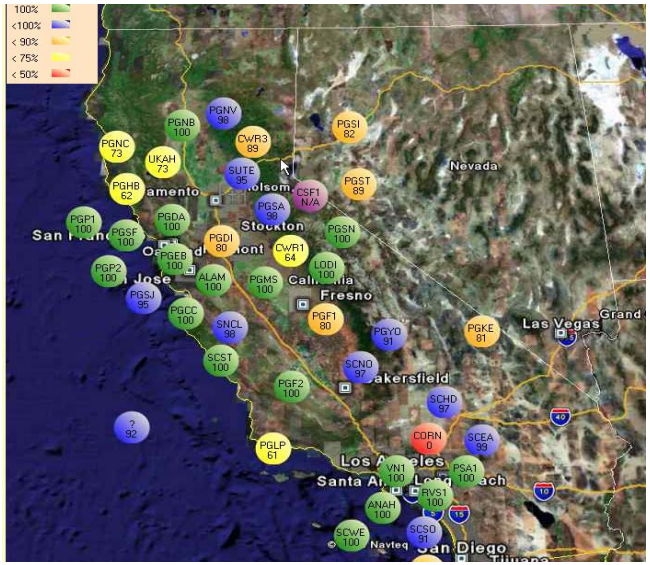

Key features

- Full AC power flow analysis performed in evaluating Day Ahead and Real-time Pre-Dispatch Market
- AC power flow for base case and contingency cases (including voltage related local controls)
- Iteration between SCUC and NA picks up non-linear effects on flow constraints and losses
- Conversion of MVA limits to MW limits (for SCUC enforcement) considers the MVAR flow on the constraints
- Market clearing does not directly include reactive power (or voltage) clearing

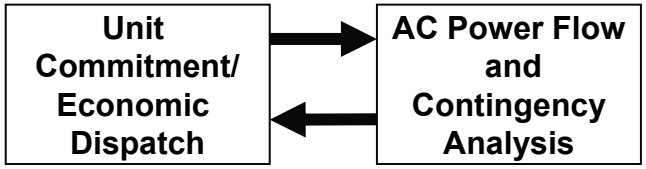

Copyright © Siemens Energy, Inc. 2011. All rights reserved.

Oncor Smart Grid Applied Systems Program

The Smart Grid Applied Systems program at Oncor focuses on the modernization, automation and integration of the Distribution Operations Control Centers. It is designed to leverage the significant investment that Oncor has already made in initiatives for Advanced Metering and Feeder Automation. The program, which includes Mobile Workforce Management, Outage Management, Distribution SCADA and Distribution Network Analysis, is a significant step in an overall transition to a Smart Grid.

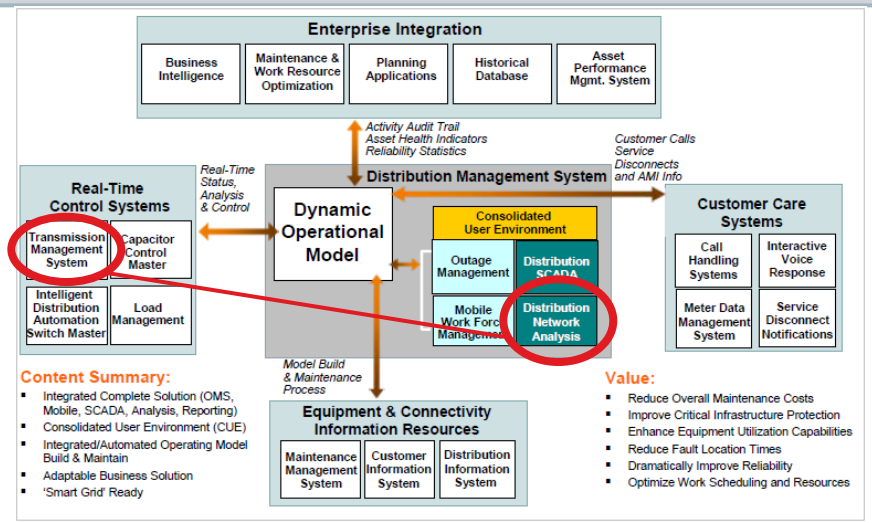

Key features

- Supports management of the distribution network and mobile work crews integrated with control and load/voltage conditions
- Proactive avoidance and correction of equipment overloads and low voltage conditions
- Reactive power (demand) or MW loss minimization, - support for transmission system
- Proposed control actions to the switching procedure manager
- Utilizes all available information from Distribution Automation and Automated Metering Infrastructure sources
- Establishes a generalized model-based integration platform for simplified integration with other enterprise systems

Copyright © Siemens Energy, Inc. 2011. All rights reserved.

Kansas City Power & Light Smart Grid Demonstration Project

Kansas City Power and Light is developing a Smart Grid demonstration project to verify processes and technologies to facilitate the transformation of their energy grid. The project is estimated to be $48 million, which includes a $24 million federal stimulus grant from the U.S. Department of Energy. Siemens will contribute key expertise, services and products in implementing and showcasing the latest technologies to modernize the energy infrastructure within a pilot area known as the Green Impact Zone.

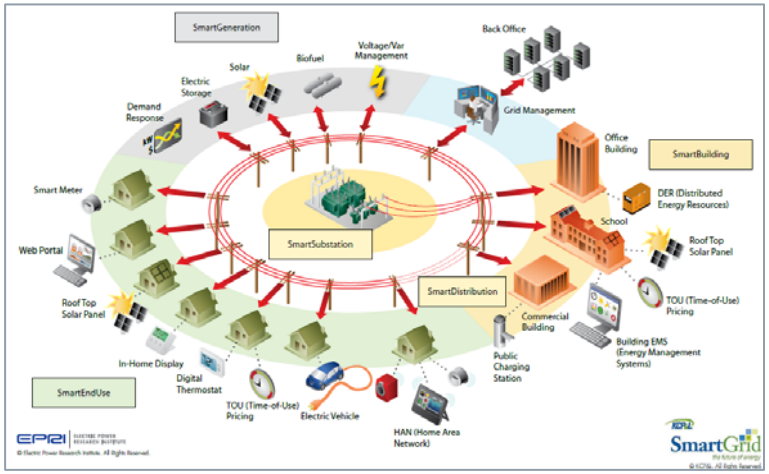

Key features	
	▪ Distribution automation and self healing grid ▪ Real-time operations information management and security ▪ Volt-Var Coordination deployed in the substation ▪ Advisory and Closed Loop mode ▪ Supporting transmission reactive power control ▪ Supporting hierarchical control architecture solution

Copyright © Siemens Energy, Inc. 2011. All rights reserved.

On-Going Development of Voltage Analysis Applications

SIEMENS

- Fast Steady-State Stability Analysis
- PMU Based Voltage Stability Applications

Copyright © Siemens Energy, Inc. 2011. All rights reserved.

Voltage Stability – Fast Stability Assessment

SIEMENS

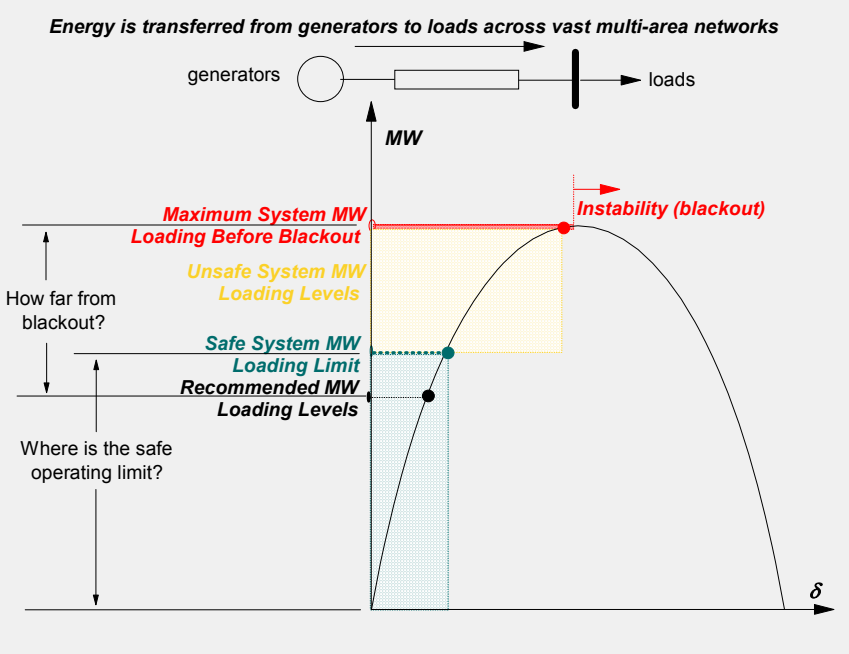

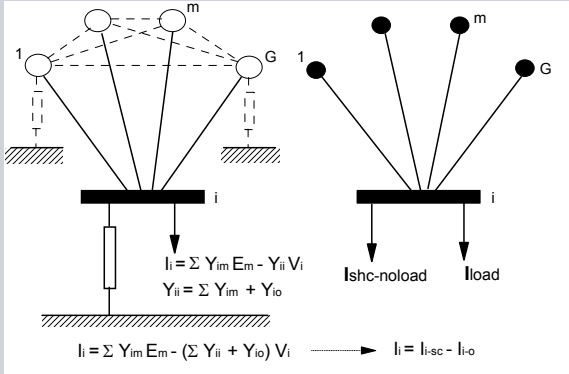

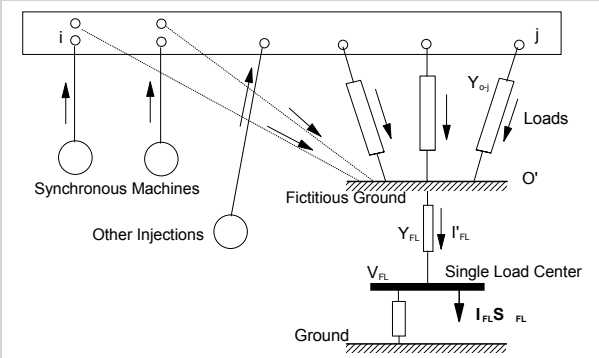

- Determine the distance to instability and a stability margin
- Use a reduced model of the network while retaining the identity of generators

Copyright © Siemens Energy, Inc. 2011. All rights reserved.

Voltage Stability – Fast Stability Assessment

SIEMENS

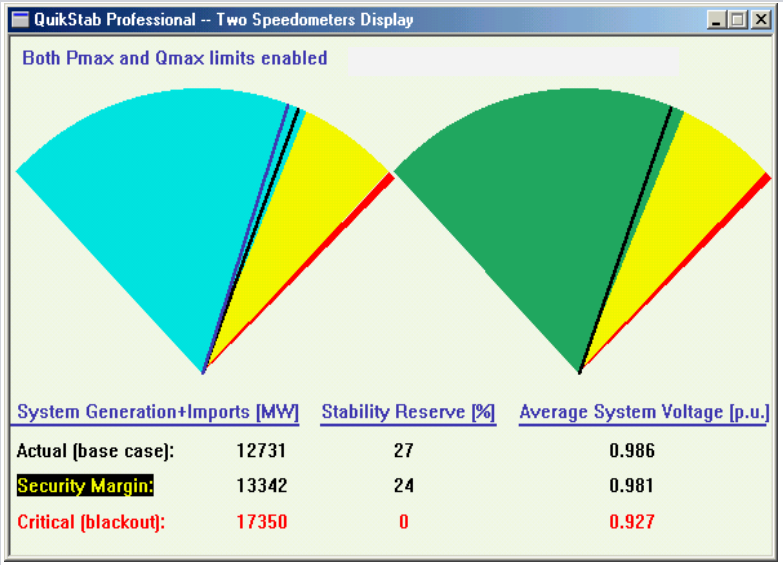

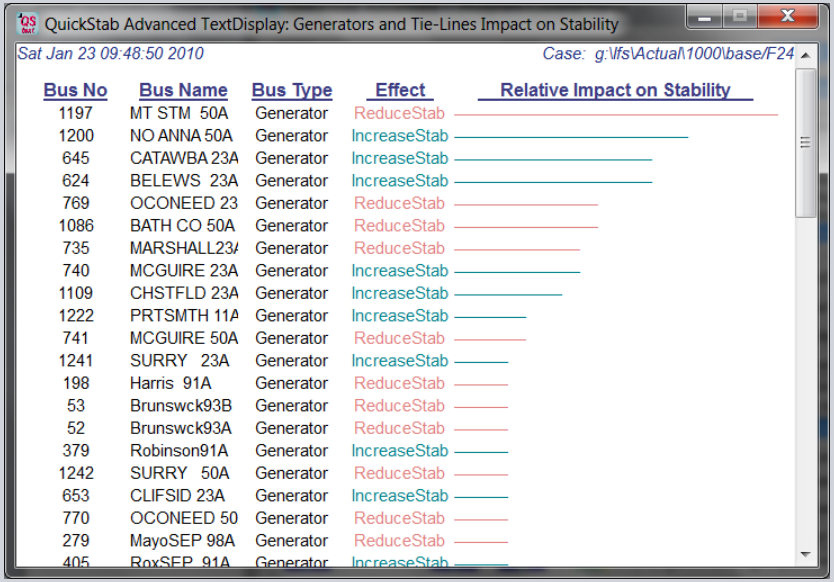

- Visually present Stability Reserve
- Identify generators and tie-line flows that have the largest impact on stability

Copyright © Siemens Energy, Inc. 2011. All rights reserved.

Voltage Stability Detection with Phasor Measurements

SIEMENS

Real-time P-V curve calculations

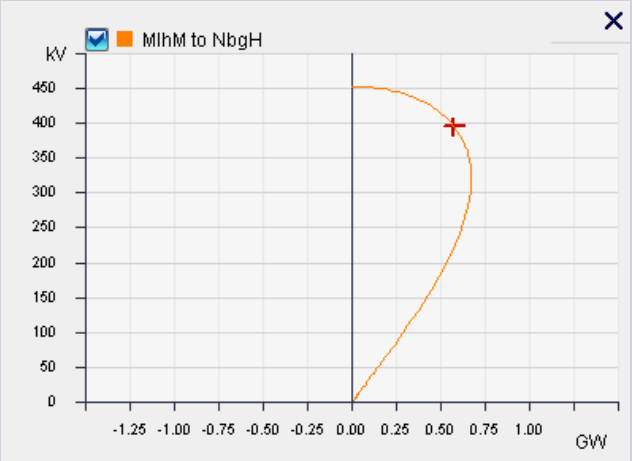

Prediction of voltage instability via indices based on calculation of Thevenin equivalents

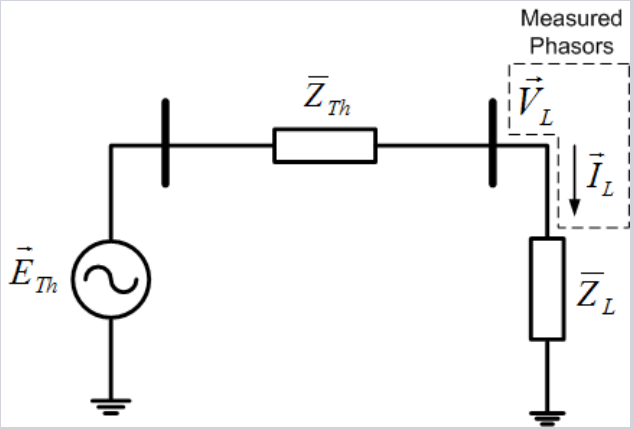

Copyright © Siemens Energy, Inc. 2011. All rights reserved.

Deploying PMU based applications

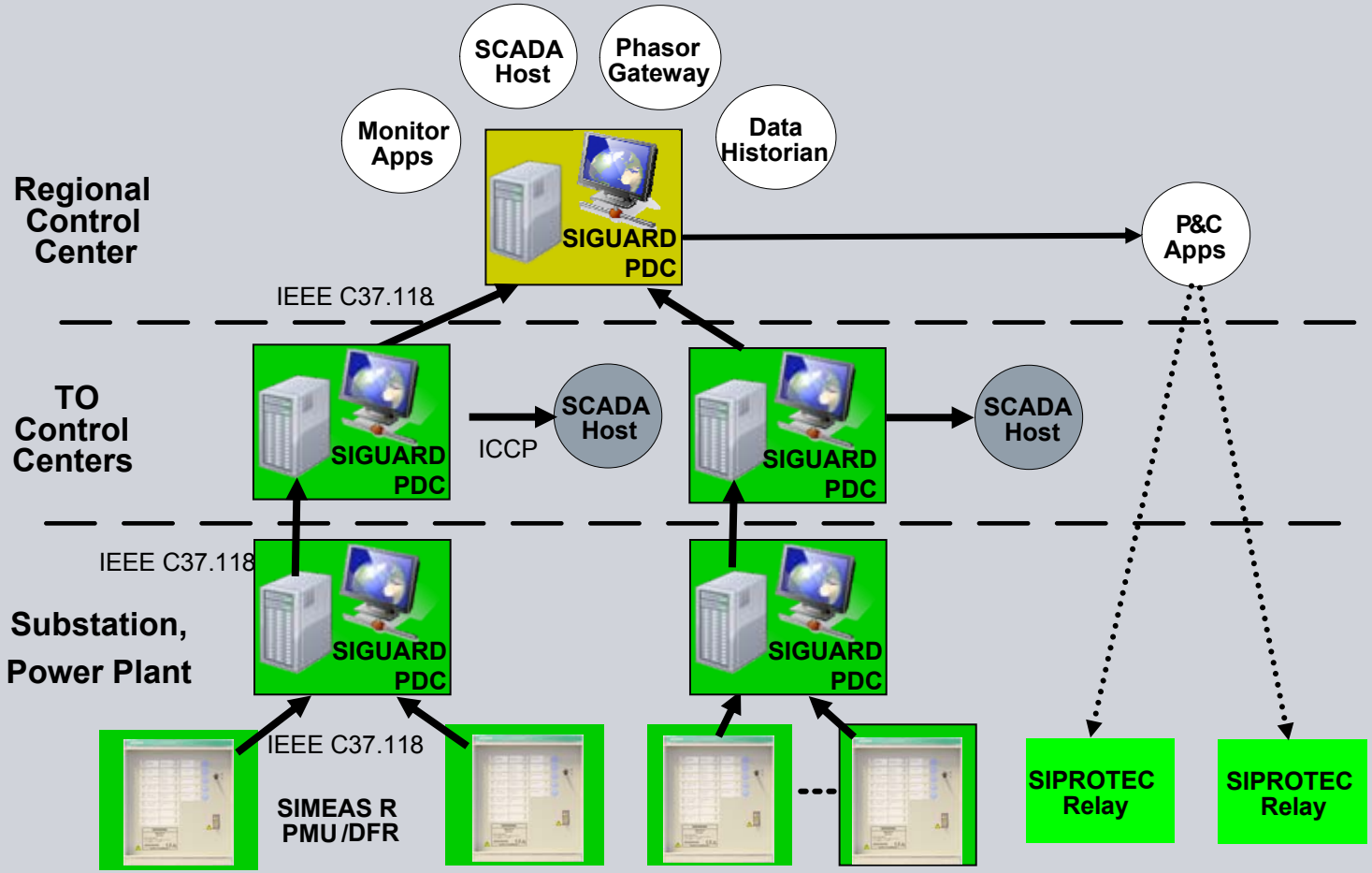

Copyright © Siemens Energy, Inc. 2011. All rights reserved.

Voltage Control and Analysis Applications - Future

SIEMENS

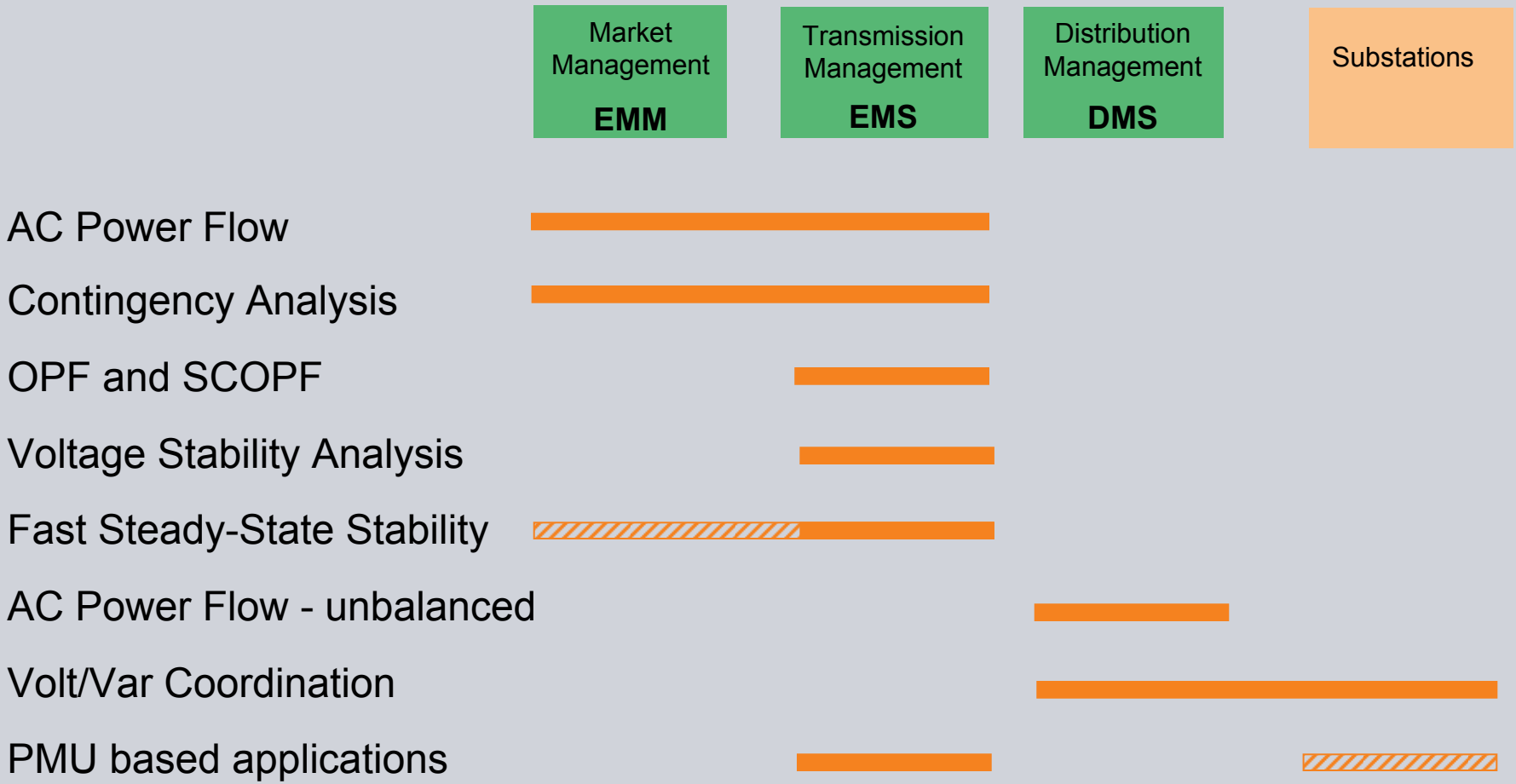

Copyright © Siemens Energy, Inc. 2011. All rights reserved.