AC Optimal Transmission Switching

Tom Dautel, Economist
Richard O'Neill, Chief Economic Advisor
Office of Energy Policy and Innovation
Federal Energy Regulatory Commission
June 29, 2011

The contents of this presentation do not necessarily represent the views of the Commission or the United States government

Background: Optimal Transmission Switching (OTS)

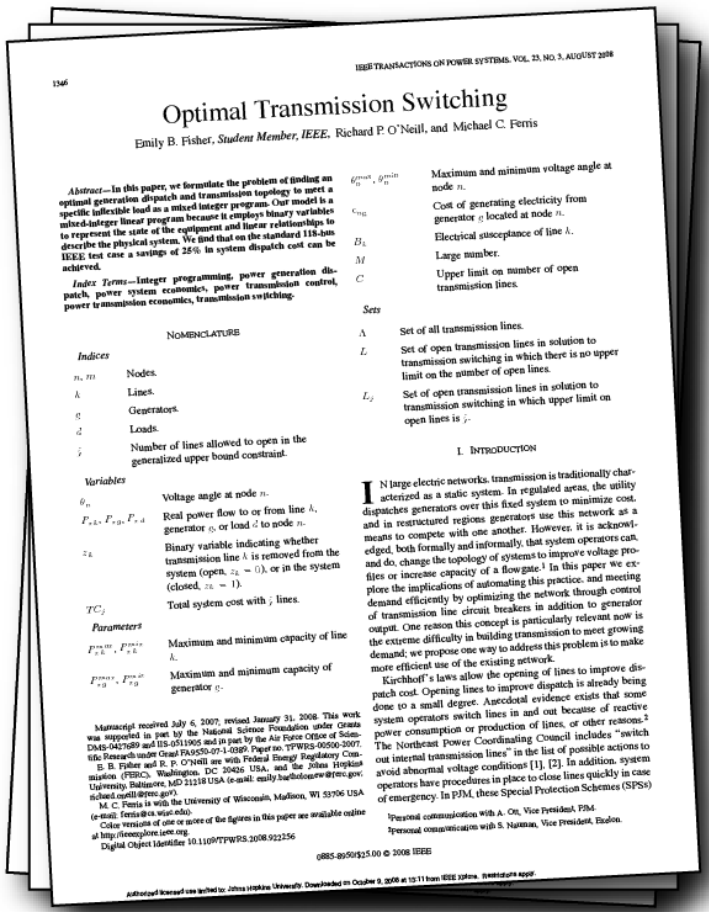

1346 IEEE TRANSACTIONS ON POWER SYSTEMS, VOL. 23, NO. 3, AUGUST 2008

Optimal Transmission Switching

Emily B. Fisher, *Student Member, IEEE*, Richard P. O'Neill, and Michael C. Ferris

Abstract—In this paper, we formulate the problem of finding an optimal generation dispatch and transmission topology to meet a specific inflexible load as a mixed integer program. Our model is a mixed-integer linear program because it employs binary variables to represent the state of the equipment and linear relationships to describe the physical system. We find that on the standard 118-bus IEEE test case a savings of 25% in system dispatch cost can be achieved.

Index Terms—Integer programming, power generation dispatch, power system economics, power transmission control, power transmission economics, transmission switching.

NOMENCLATURE

Indices

n, m Nodes.
k Lines.
g Generators.
d Loads.
j Number of lines allowed to open in the generalized upper bound constraint.

Variables

θ_n Voltage angle at node n.
P_{nk}, P_{ng}, P_{nd} Real power flow to or from line k, generator g, or load d to node n.
z_k Binary variable indicating whether transmission line k is removed from the system (open, $z_k = 0$), or in the system (closed, $z_k = 1$).
TC_j Total system cost with j lines.

Parameters

$P_{nk}^{max}, P_{nk}^{min}$ Maximum and minimum capacity of line k.
$P_{ng}^{max}, P_{ng}^{min}$ Maximum and minimum capacity of generator g.
$\theta_n^{max}, \theta_n^{min}$ Maximum and minimum voltage angle at node n.
c_{ng} Cost of generating electricity from generator g located at node n.
B_k Electrical susceptance of line k.
M Large number.
C Upper limit on number of open transmission lines.

Sets

A Set of all transmission lines.
L Set of open transmission lines in solution to transmission switching in which there is no upper limit on the number of open lines.
L_j Set of open transmission lines in solution to transmission switching in which upper limit on open lines is j.

I. INTRODUCTION

IN large electric networks, transmission is traditionally characterized as a static system. In regulated areas, the utility dispatches generators over this fixed system to minimize cost, and in restructured regions generators use this network as a means to compete with one another. However, it is acknowledged, both formally and informally, that system operators can, and do, change the topology of systems to improve voltage profiles or increase capacity of a flowgate.[1] In this paper we explore the implications of automating this practice, and meeting demand efficiently by optimizing the network through control of transmission line circuit breakers in addition to generator output. One reason this concept is particularly relevant now is the extreme difficulty in building transmission to meet growing demand; we propose one way to address this problem is to make more efficient use of the existing network.

Kirchhoff's laws allow the opening of lines to improve dispatch cost. Opening lines to improve dispatch is already being done to a small degree. Anecdotal evidence exists that some system operators switch lines in and out because of reactive power consumption or production of lines, or other reasons.[2] The Northeast Power Coordinating Council includes "switching out internal transmission lines" in the list of possible actions to avoid abnormal voltage conditions [1], [2]. In addition, system operators have procedures in place to close lines quickly in case of emergency. In PJM, these Special Protection Schemes (SPSs)

[1]Personal communication with A. Ott, Vice President, PJM.
[2]Personal communication with S. Naxman, Vice President, Exelon.

Manuscript received July 6, 2007; revised January 31, 2008. This work was supported in part by the National Science Foundation under Grants DMS-0427689 and IIS-0511905 and in part by the Air Force Office of Scientific Research under Grant FA9550-07-1-0389. Paper no. TPWRS-00500-2007.

B. B. Fisher and R. P. O'Neill are with Federal Energy Regulatory Commission (FERC), Washington, DC 20426 USA, and the Johns Hopkins University, Baltimore, MD 21218 USA (e-mail: emily.bartholomew@ferc.gov; richard.oneill@ferc.gov).

M. C. Ferris is with the University of Wisconsin, Madison, WI 53706 USA (e-mail: ferris@cs.wisc.edu).

Color versions of one or more of the figures in this paper are available online at http://ieeexplore.ieee.org.

Digital Object Identifier 10.1109/TPWRS.2008.922256

0885-8950/$25.00 © 2008 IEEE

Authorized licensed use limited to: Johns Hopkins University. Downloaded on October 9, 2008 at 15:11 from IEEE Xplore. Restrictions apply.

Fisher, O'Neill and Ferris (2008) demonstrated that, compared to an optimally dispatched transmission system (using DC optimal power flow), dramatic dispatch cost reductions can be achieved by allowing the optimization to <u>remove transmission lines from service</u>

Added binary line switching variables:

- N = 1 for switch closed (line in service)
- N = 0 for switch open (line out of service)

Simultaneously optimized traditional resource <u>and</u> transmission dispatch

Fisher, Emily Bartholomew, Richard P. O'Neill, and Michael C. Ferris. Optimal Transmission Switching. *IEEE Transactions on Power Systems*, 23:1346-1355, 2008.

Fisher, O'Neill and Ferris

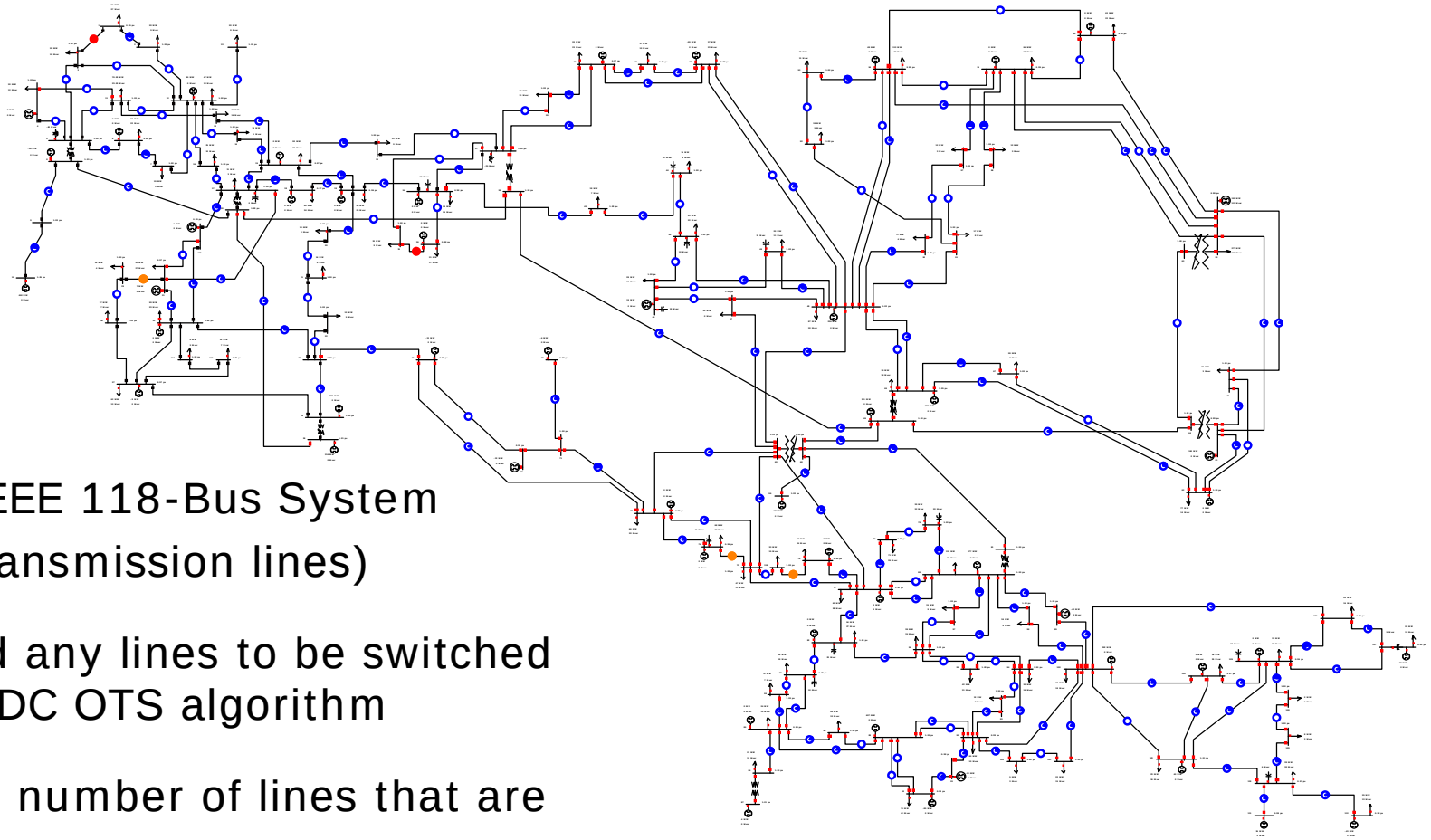

Used IEEE 118-Bus System (186 transmission lines)

Allowed any lines to be switched out by DC OTS algorithm

Limited number of lines that are allowed to be simultaneously switched out by algorithm (to limit problem size)

Image: PowerWorld

Results of Fisher, O'Neill and Ferris

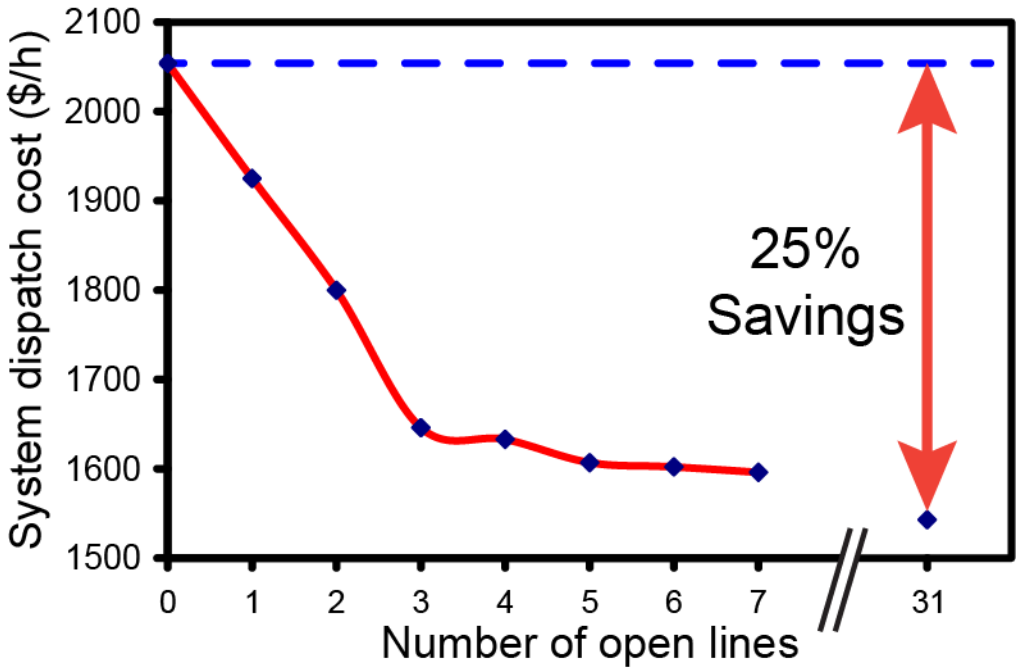

Demonstrated huge savings through OTS, even with only a few lines switched out

Appears to be decreasing marginal returns to the number of lines allowed to be switched out in OTS algorithm

Figure Source: Fisher, Emily Bartholomew, Kory W. Hedman, Richard P. O'Neill, Michael C. Ferris, and Shmuel S. Oren. Optimal Transmission Switching. Trans-Atlantic INFRADAY Conference on Applied Infrastructure Modeling and Policy Analysis, Resources for the Future, Washington, DC, November 14, 2008.

Some Transmission Line Physics

Two general phenomena related to transmission of AC power

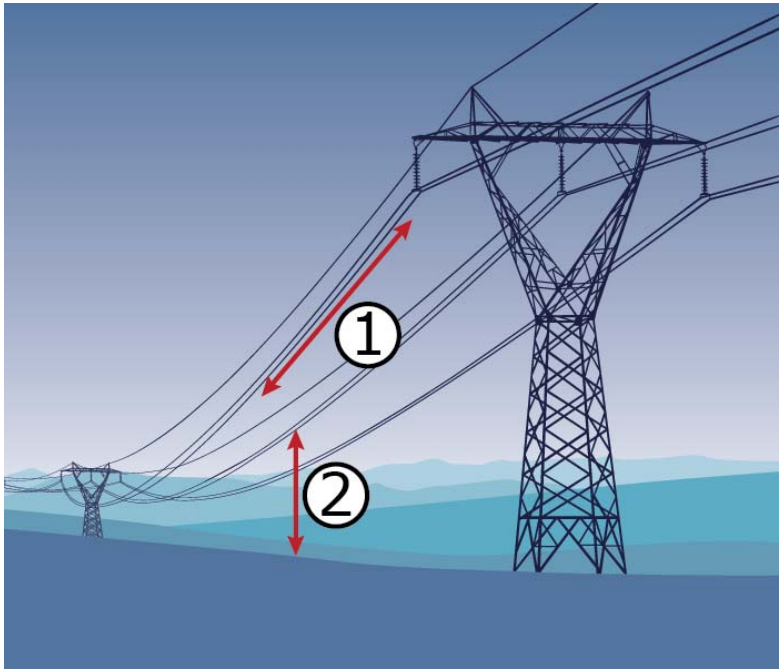

1) The current in an AC transmission line flows against resistive and electromagnetic impedance (together known as "**series impedance**")

2) Any energized AC transmission line (i.e., a line that is at voltage, whether or not bulk power is flowing on the line) produces electric fields that interact with ground*, and has some current leakage, effects that together are described by the "**shunt admittance**" of the transmission line

*AC electric field interactions are primarily between the three phases of the transmission line themselves, and don't significantly involve the physical ground, but mathematically can be described as being between the transmission line and the circuit ground, as shown on next slide

One-Line Circuit Model of Transmission Line Physics

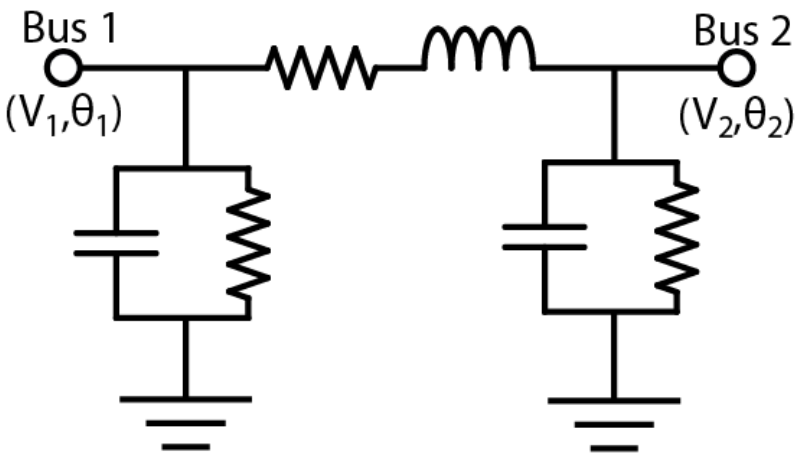

Detailed circuit model of transmission line showing series resistance and inductance, and shunt capacitance and conductance

Shunt conductance is often negligible, so that the shunt typically consists only of capacitance

AC Power Flow Model

The circuit model for the true AC transmission line physics is known as the AC power flow model

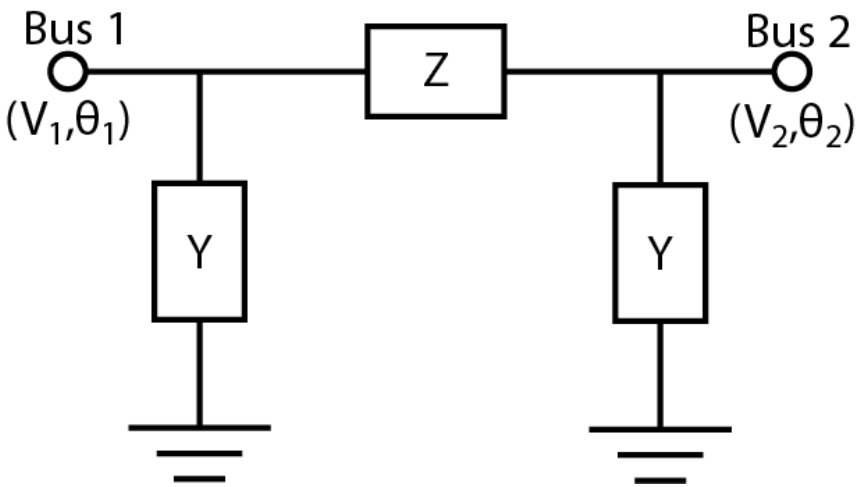

Accurately describes all voltage magnitudes, voltage phase angles, real power flows and reactive power flows in an AC system

Mathematics associated with AC power flow model are nonlinear and (when used as constraints in optimization) nonconvex

Linearized "DC" Power Flow Model

Makes the following assumptions/simplifications (among others):

- Assumes all voltage magnitudes are fixed
- Linearizes trig terms of AC power flow for small voltage angle differences $\Delta\theta$, such that $\sin(\Delta\theta) = \Delta\theta$
- Completely ignores reactive power
- Assumes <u>line shunt admittance is zero</u>

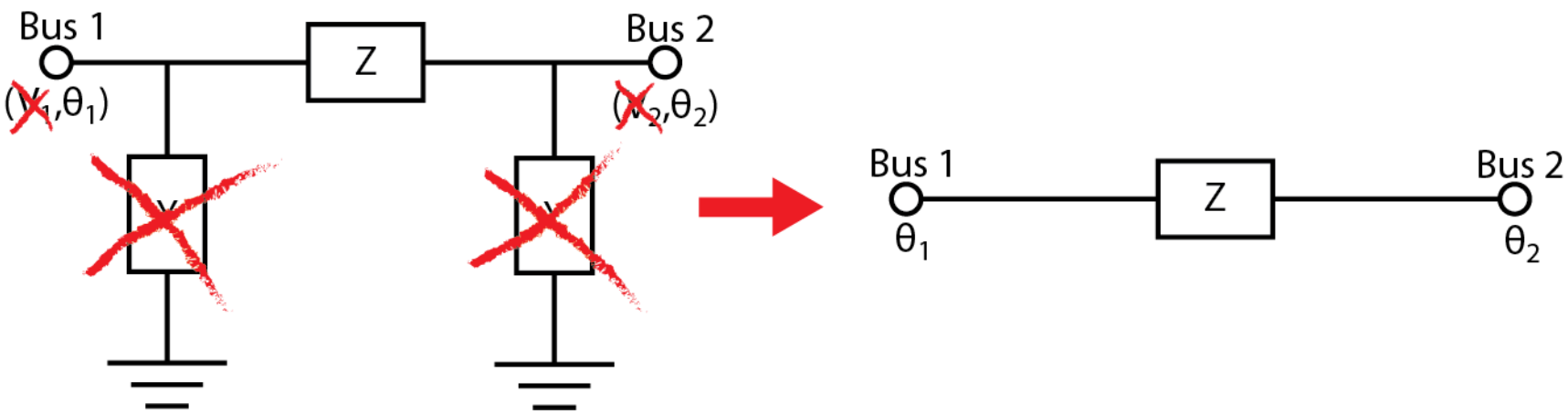

Transmission Switching and AC vs. DC Power Flow Model

Assumptions used in DC power flow model, on which DC optimal transmission switching is based, may prevent realization of many of the potential benefits of transmission switching

We will show that using the full AC power flow model as part of optimal switching results in more meaningful switching configurations, and possibly greater efficiency

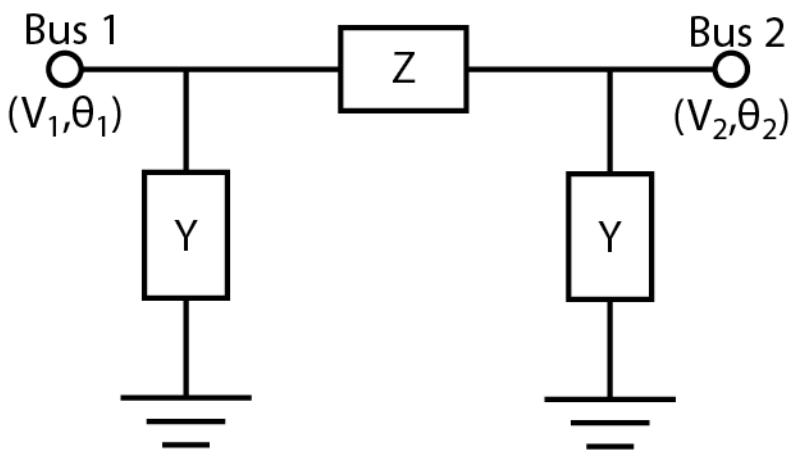

AC Power Flow Model Circuit Diagram

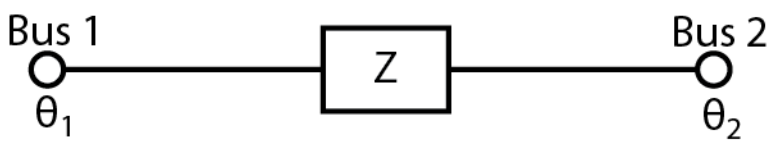

DC Power Flow Model Circuit Diagram

Kirchoff's Current Law

"The algebraic sum of currents in a network of conductors meeting at a point is zero"

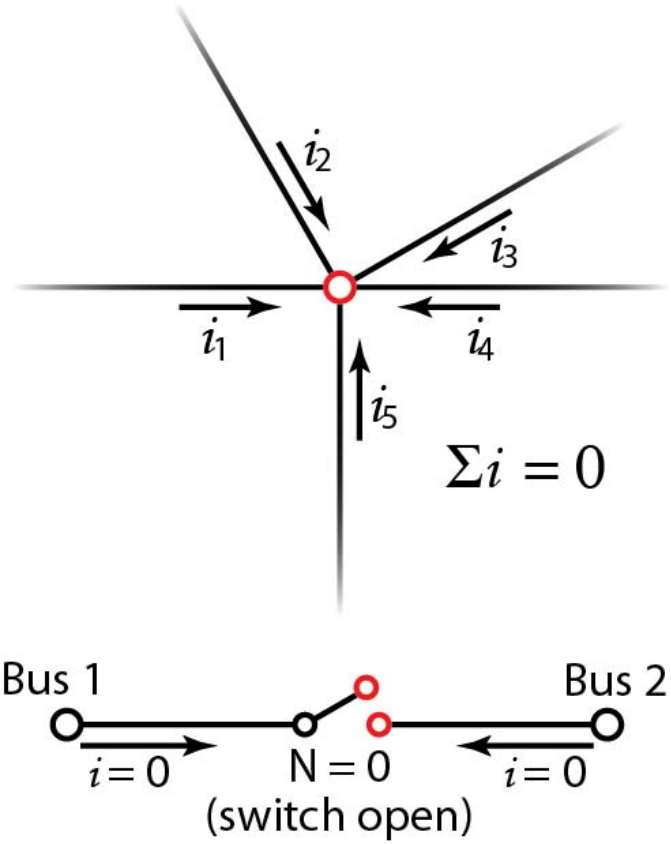

By direct implication, any branch that terminates at a node (point) at which there are no other connected branches (conductors) must necessarily have zero current (and therefore zero power flow)

Therefore, for a simple branch between two nodes, opening a switch anywhere in that branch will have the same effect as removing that entire physical line from the system

DC Transmission Switching

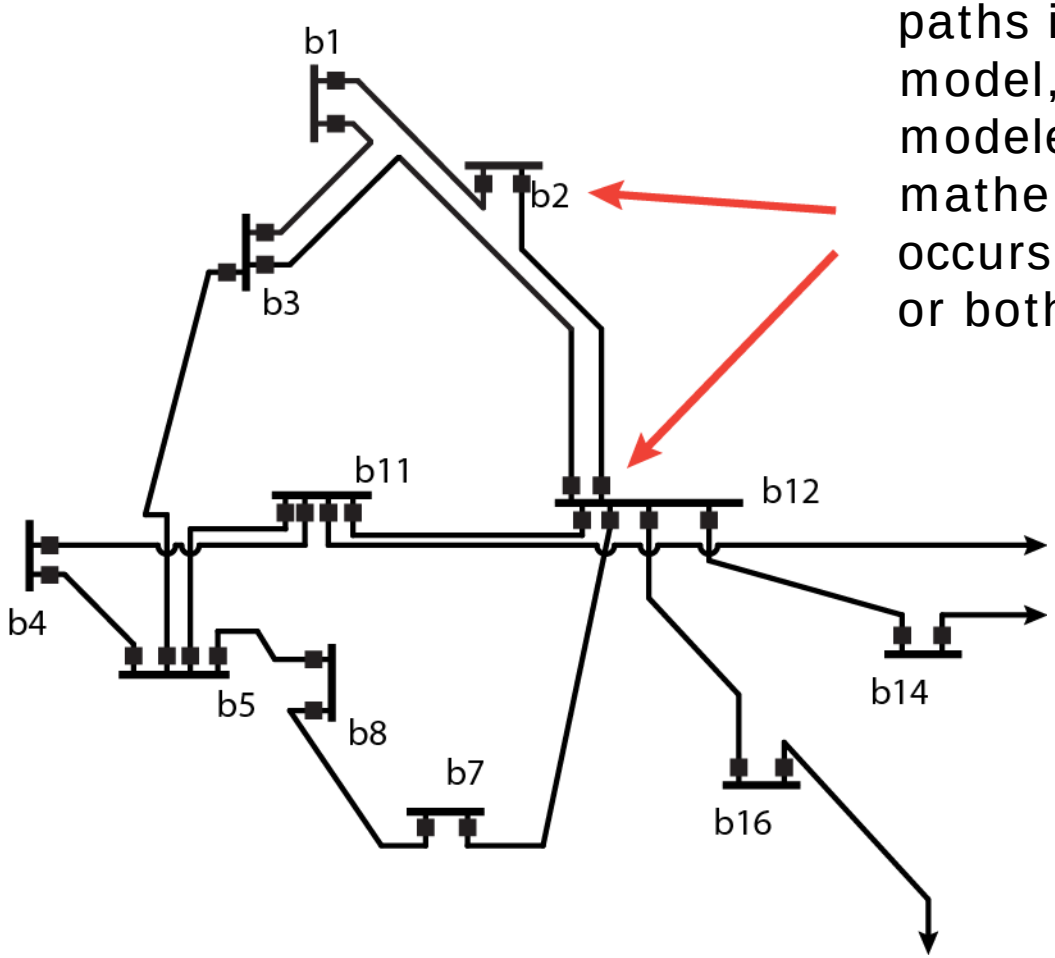

Because there are no shunt paths in the DC power flow model, switching a line out is modeled the same way mathematically whether it occurs at the near end, far end, or both ends

AC Transmission Switching

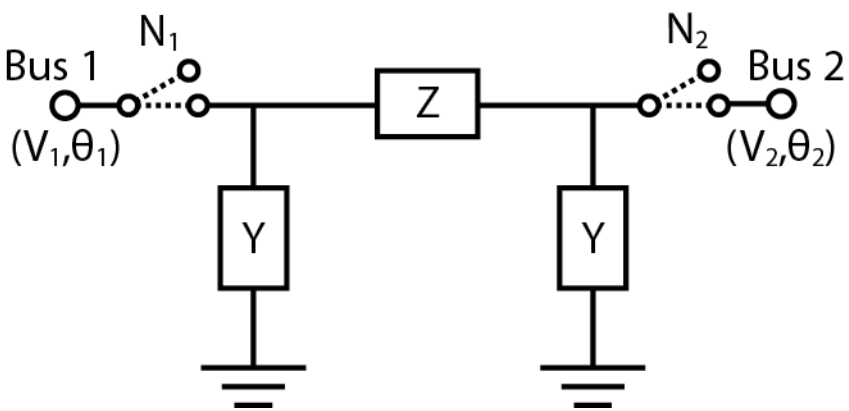

Because AC power flow model has two shunt components, a switch at one end of the line cannot disconnect the shunt-to-ground paths from the opposite bus

When one end of transmission line is opened, the transmission line now acts much like a shunt capacitor, providing reactive power to the opposite bus

Only when <u>both</u> ends are opened is the entire line deactivated

Example 1: Simple Generator/Load Case

This PowerWorld case shows a generator serving a load at the same bus (no transmission system)

The load requires 40 Mvar and all of that reactive power must be supplied by the generator

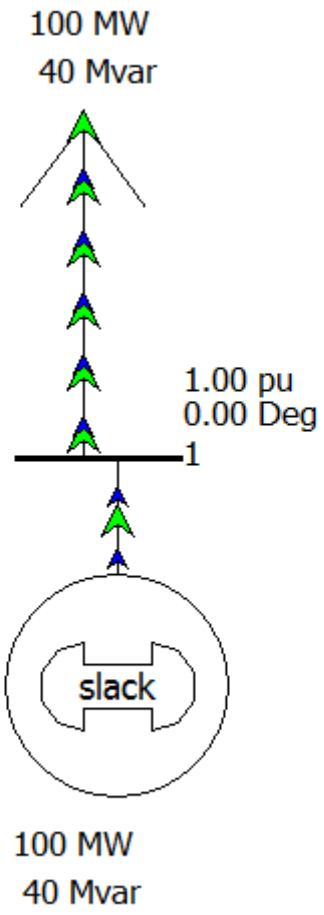

Example 2: Attach an Inactive Line to Bus 1

PowerWorld won't let you attach a line and switch out only one end, but we can replicate that effect by attaching an "inactive" line. This case is the same as the previous, except with an energized (i.e., at voltage) but inactive (i.e., not flowing any bulk power) transmission line attached to Bus 1.

Bus 2 is not attached to anything:
no devices or load,
not networked,
not grounded

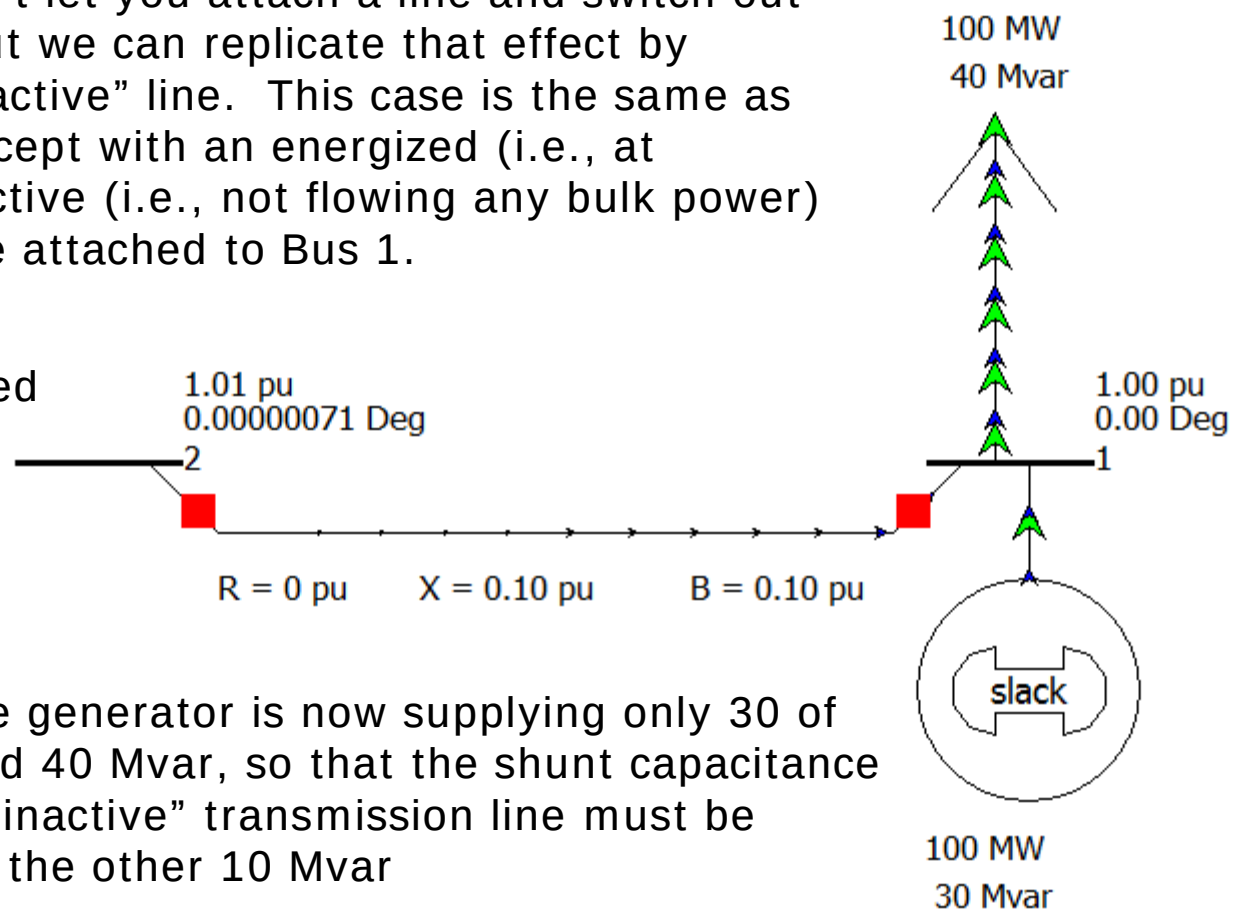

Effect: The generator is now supplying only 30 of the required 40 Mvar, so that the shunt capacitance (B) in the "inactive" transmission line must be generating the other 10 Mvar

Reactive Power Production Potential from Switched-Out AC Lines

At low line loading levels (such as is present when a line is switched-out at one end) reactive power generation by the line is significant

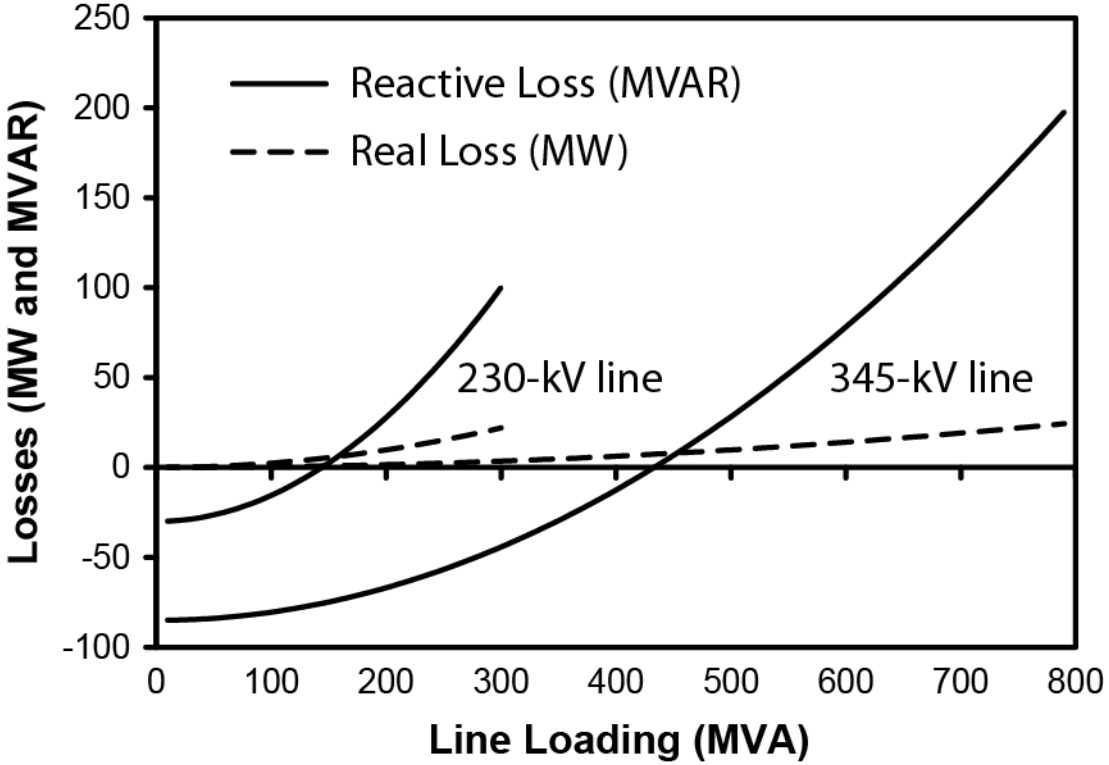

Source: B. Kirby and E. Hirst, *Ancillary-Service Details: Voltage Control*, ORNL/CON-453, Oak Ridge National Laboratory, Oak Ridge Tenn., December 1997.

AC Transmission Switching

Instead of two meaningful line configurations (open or closed, N = 0 or N = 1), there are now four:

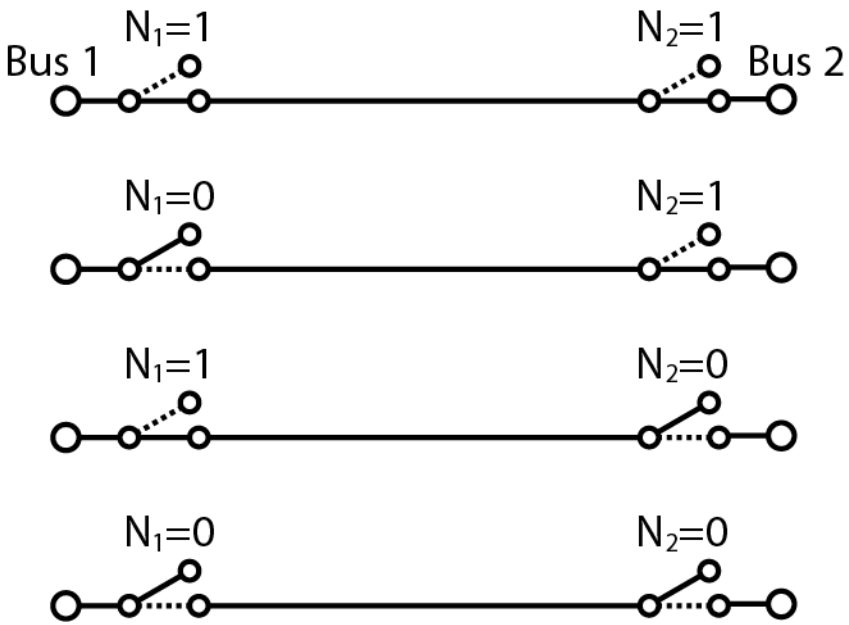

Both ends closed: $(N_1,N_2) = (1,1)$

Open near end: $(N_1,N_2) = (0,1)$

Open far end: $(N_1,N_2) = (1,0)$

Both ends open: $(N_1,N_2) = (0,0)$

What will AC Switching Do?

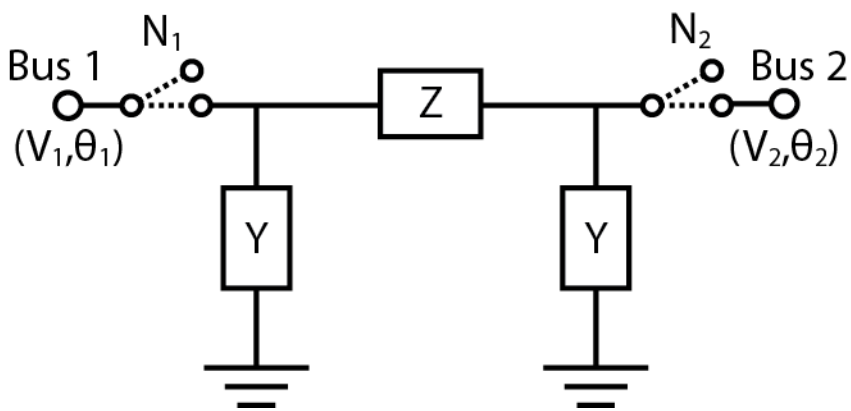

Possible benefits:

(1) Identification of more efficient switching configurations than found through DC switching

(2) Avoidance of misidentifying "beneficial" switching configurations that are actually infeasible (as may be found through DC OTS)

(3) Facilitate corrective/self-healing response post-contingency while ensuring compliance with voltage constraints

Modeling AC Transmission Switching

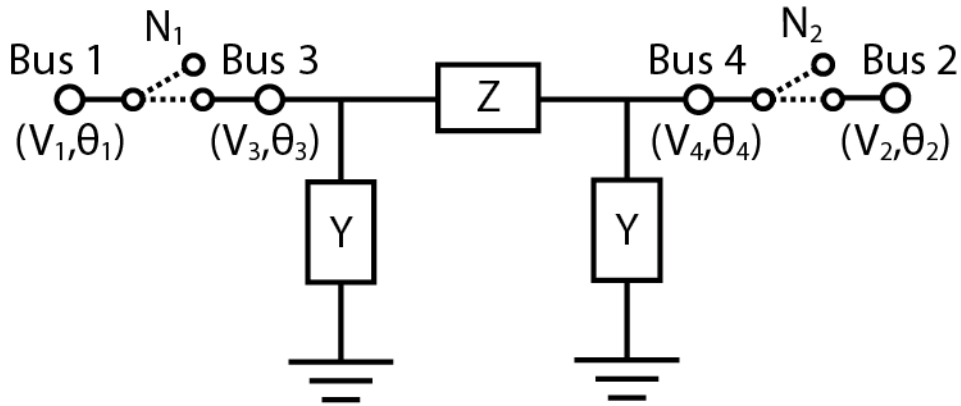

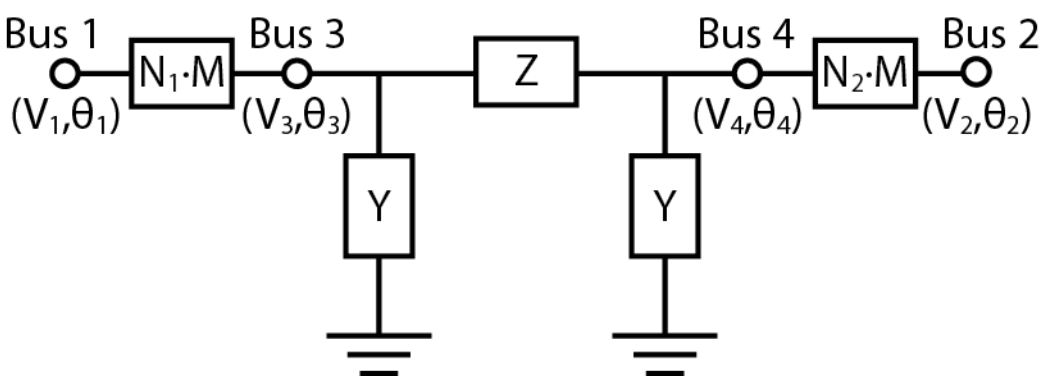

Can model by adding two buses to each line (Bus 3 and Bus 4, one just inside each switch)

Assign switch admittance $Y_{switch} = N \cdot M$, where M is a large number

Must add at least six new variables (N_1, V_3, θ_3, N_2, V_4, θ_4) and four new power balance equations (one real and one reactive for each new bus)

Is there a simpler way?

Modeling AC Transmission Switching

Alternative approach: switch from π-circuit model to T-circuit model

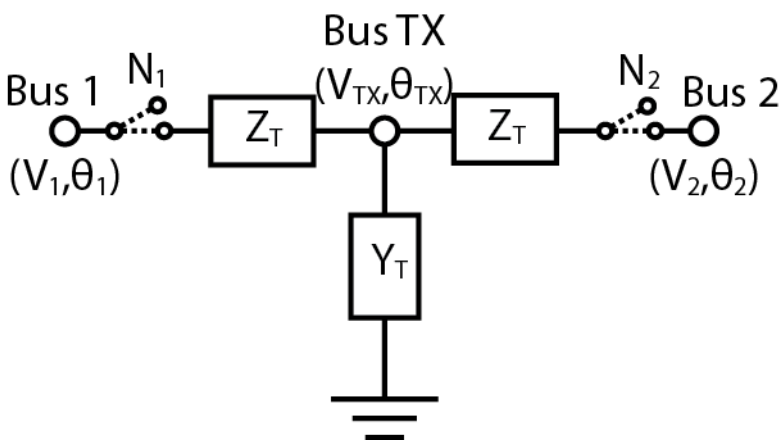

There is a parameter transformation (on next slide) that makes the π-circuit model and the T-circuit model equivalent mathematical representations

T-circuit model allows easy representation of transmission switches at ends of the line

Requires addition of only one new bus

π-Circuit to T-Circuit Transformation

Use delta-wye transformation, considering the two grounds to be the same node

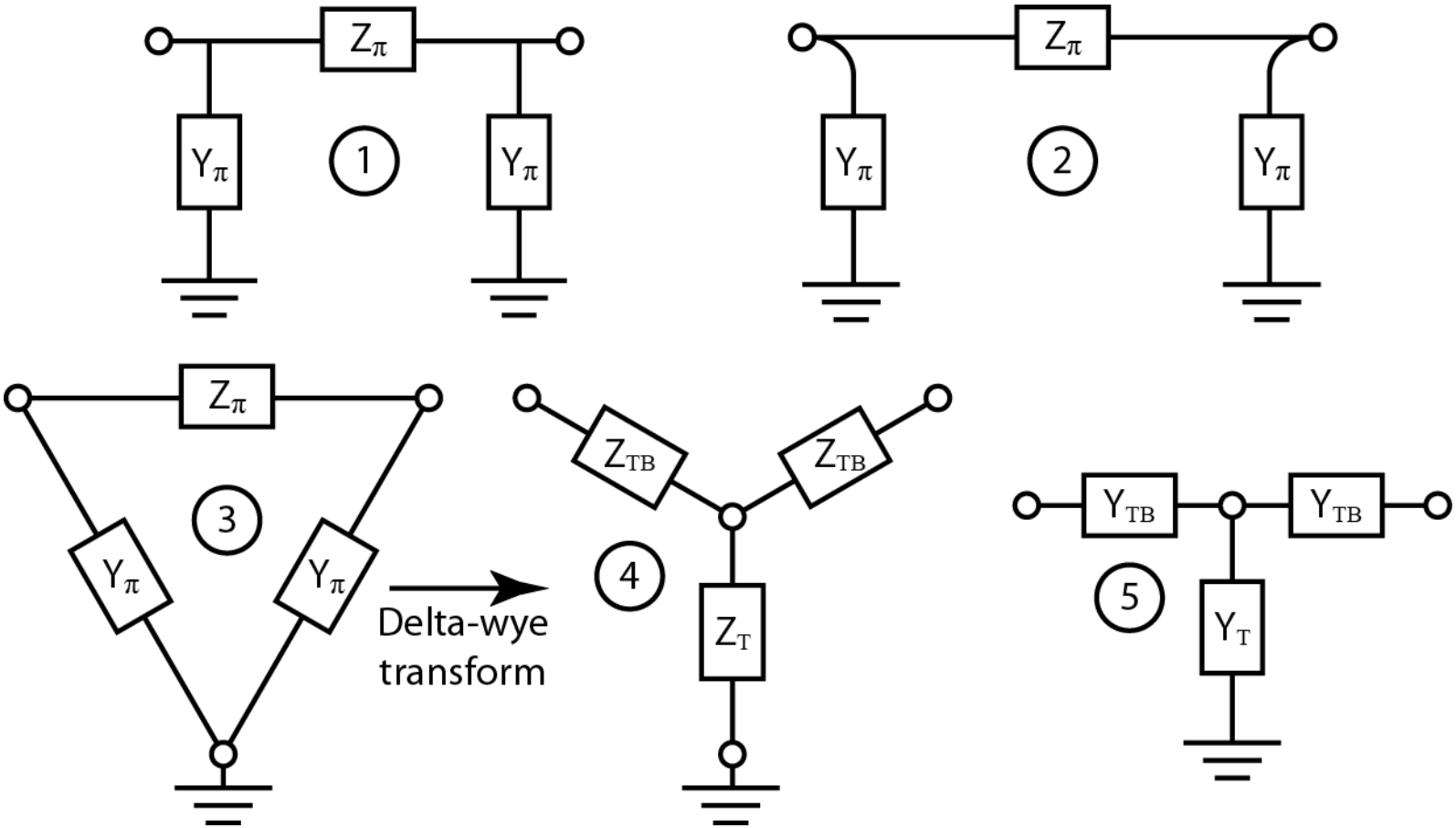

T-Circuit Model of Switchable AC Transmission Line

Now add switches at each ends of the line

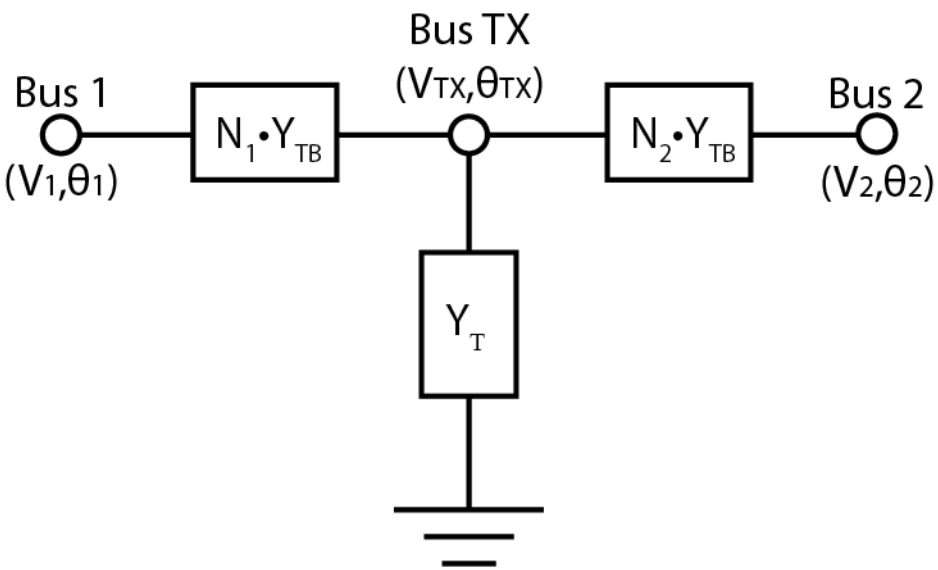

Again using Kirchhoff's Current Law, the switches can be mathematically modeled as binary multipliers for the admittance values in each branch of the T

The effective branch admittance is the product of binary switching variable N and nominal branch admittance Y_{TB}, or $N \cdot Y_{TB}$

Switch open: $N \cdot Y_{TB} = 0 \cdot Y_{TB} = 0$

Switch closed: $N \cdot Y_{TB} = 1 \cdot Y_{TB} = Y_{TB}$

T-Circuit Model of Switchable AC Transmission Line

Requires addition of a new Bus TX for each switchable AC transmission line

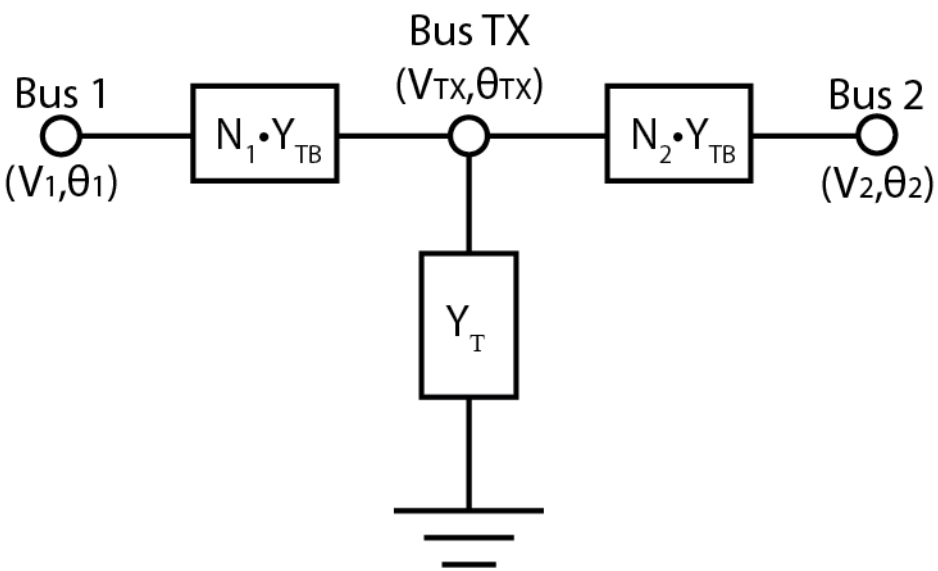

(Note: Be careful to not overly bound V_{TX} variables. They must be allowed to drop to 0 p.u. when the line is fully switched out, and to rise to a generous level when the line is only partially switched.)

New bus has voltage and voltage angle, V_{TX} and θ_{TX}, as distinct from Bus 1 and Bus 2 values

So every switchable AC transmission line introduces only four additional variables: N_1, N_2, V_{TX} and θ_{TX}

Introduces only two new power balance constraints (one real, one reactive) at new Bus TX

T-circuit model is mathematically and intuitively simpler than π-circuit model

Examples of AC OTS

The following three examples use the 6-bus test case from the following:

Wood, Allen J. and Bruce F. Wollenberg. *Power Generation, Operation, and Control*, 2nd ed. (New York: John Wiley & Sons, 1996), 104.

Available electronically with MatPower:
http://www.pserc.cornell.edu/matpower/

Technical details:

- 6 buses
- 11 transmission lines
- 3 generators
- 3 loads

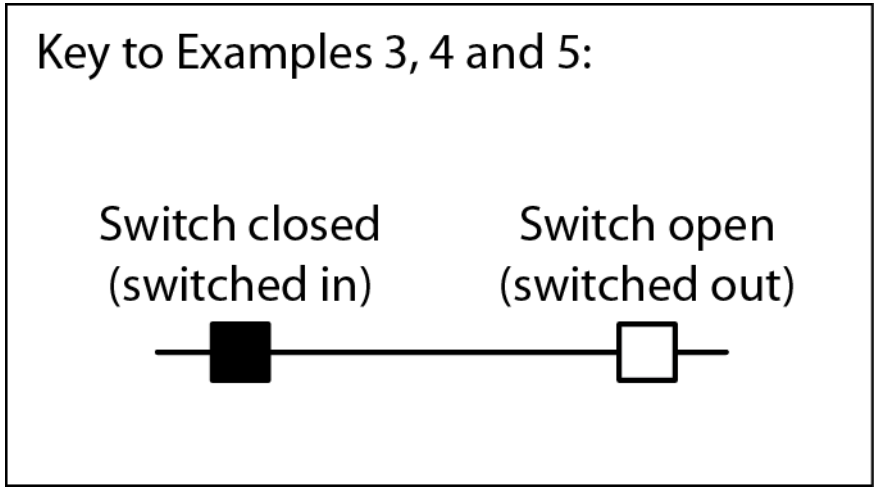

Example 3:

Base Case (no switching)

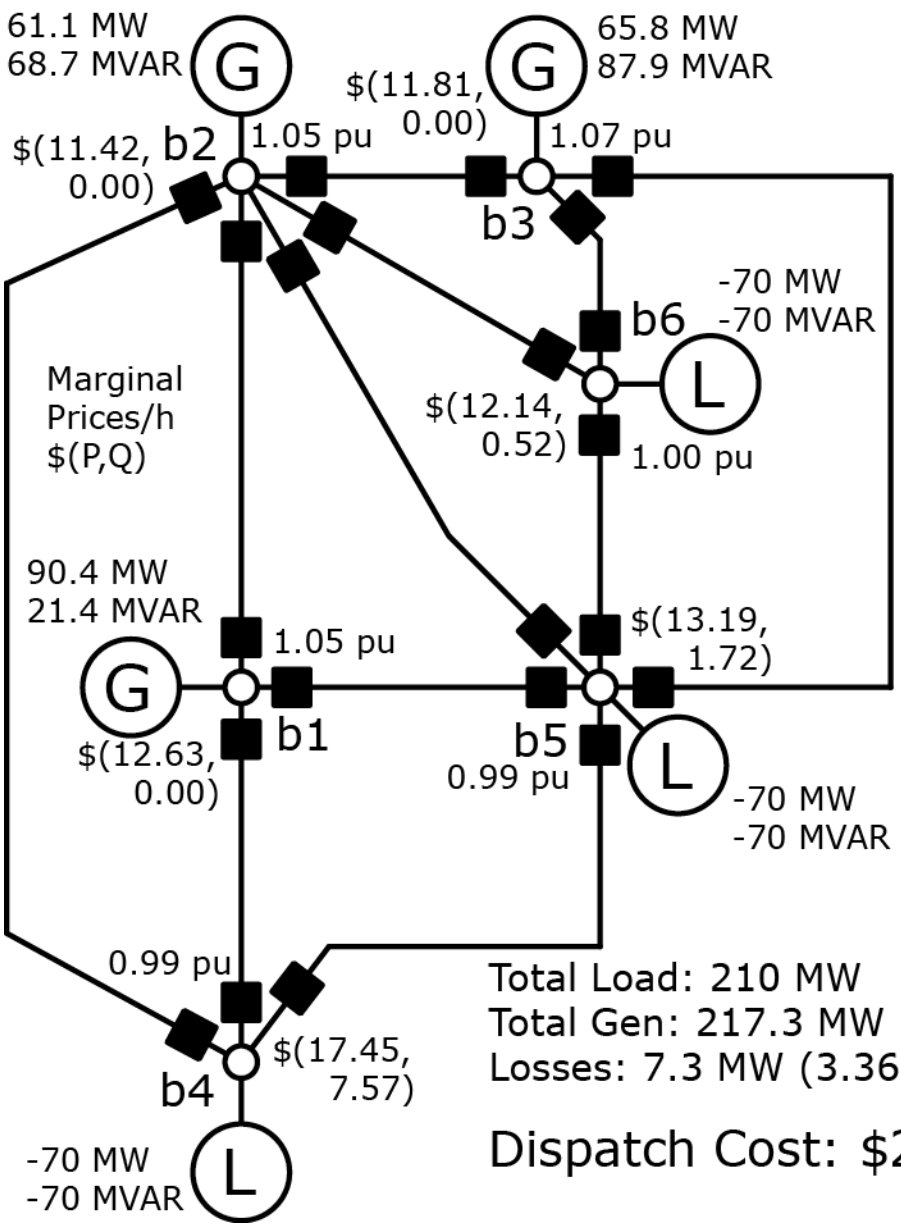

Total Load: 210 MW
Total Gen: 217.3 MW
Losses: 7.3 MW (3.36%)

Dispatch Cost: $2507/h

No binding thermal constraints

Buses 1, 2 and 3 have voltage set points (upper bounds = lower bounds) of 1.05, 1.05 and 1.07 p.u., respectively

So voltage at buses 1, 2, and 3 are always binding

No binding generator output constraints

(No load costs not included)

Example 4: Optimally Switched

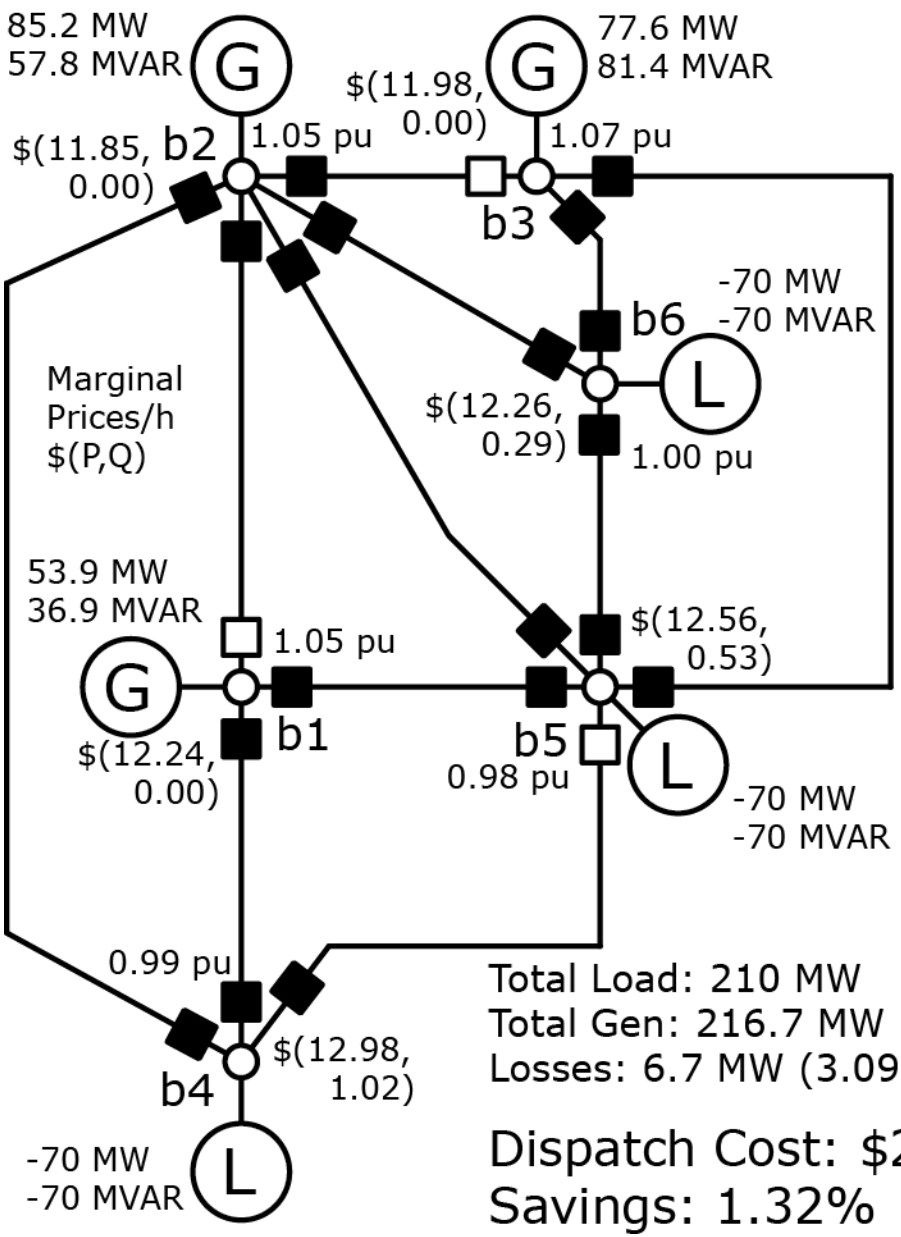

Total Load: 210 MW
Total Gen: 216.7 MW
Losses: 6.7 MW (3.09%)

Dispatch Cost: $2474/h
Savings: 1.32%

AC OTS run to identify optimal switching configurations

Three switches opened

Optimality not proven because node relaxations have multiple local optima, but this was the best after thousands of multi-starts

Same constraints binding as base case (voltage on buses 1, 2, and 3)

Example 5: Switching Experiment

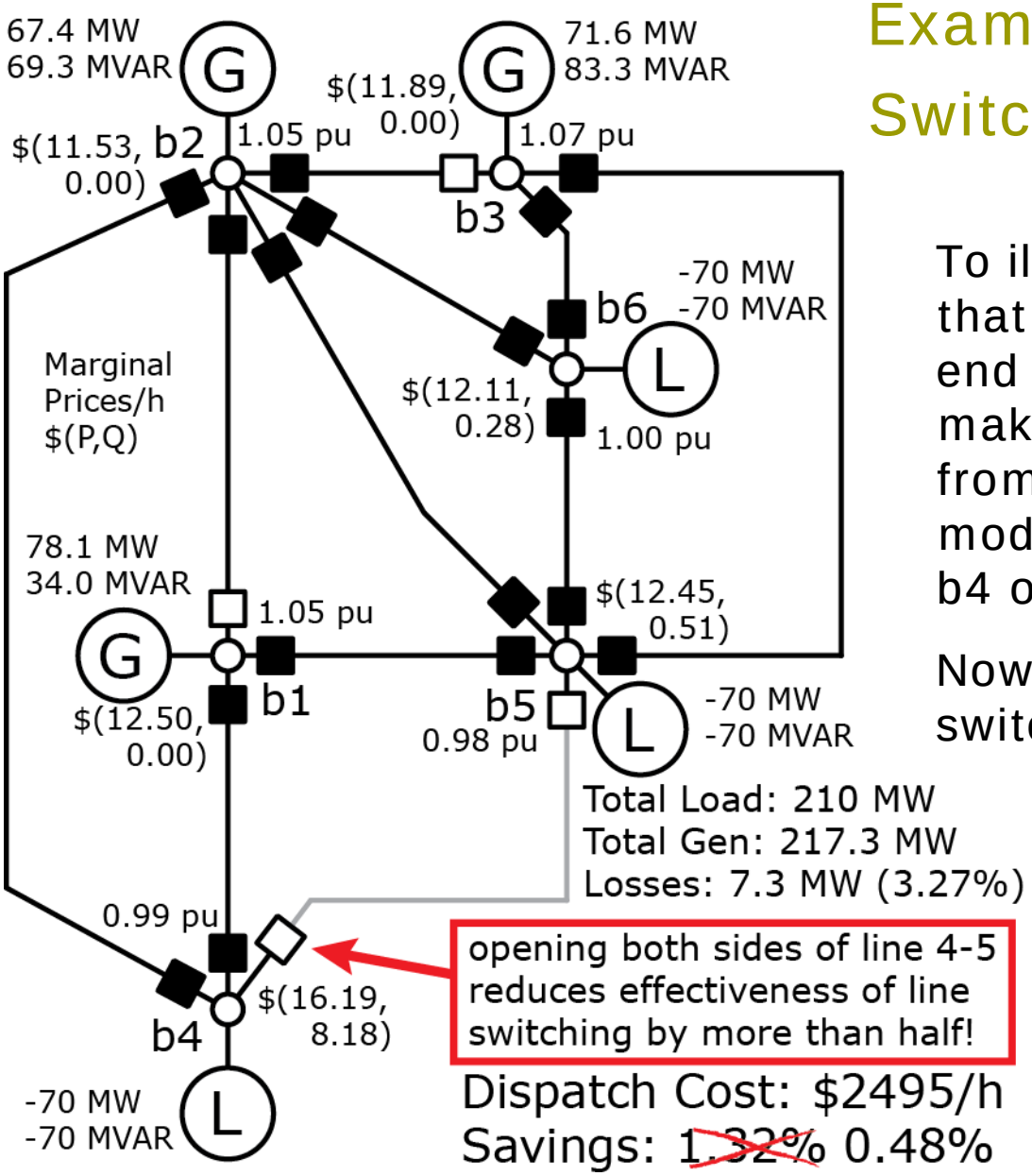

opening both sides of line 4-5 reduces effectiveness of line switching by more than half!

Dispatch Cost: $2495/h

Savings: ~~1.32%~~ 0.48%

To illustrate the difference that switching out only one end of a transmission line makes, the configuration from Example 4 was modified to switch out end b4 of the 4-5 line

Now line 4-5 is totally switched out

Optimization run with switches fixed (generation dispatch only)

AC Optimal Transmission Switching: Problem Complexity

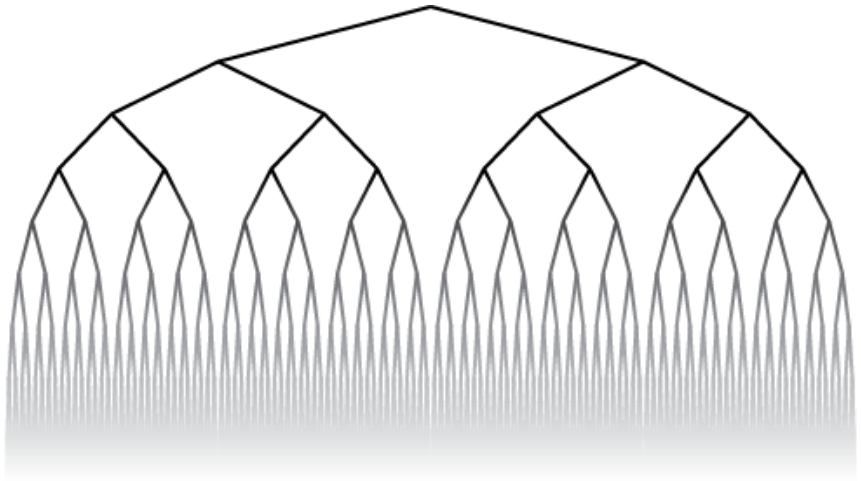

Number of binary states (for full system switching) is now dramatically increased from DC switching

- DC transmission switching problem has 2^n binary states associated with switching (where n is number of switchable lines)
- AC transmission switching problem has 2^{2n} binary states associated with switching

$2^{2n} >> 2^n$

Therefore, the AC mixed-integer program's branch-and-bound tree is significantly larger, and this is potentially a much more difficult problem to solve

Significant Nonconvexity to AC OTS Node Relaxations

While we are finding that reasonably formulated AC optimal power flow problems often have only one local optimum, relaxations to a node in the AC optimal transmission switching branch-and-bound tree (where switching variables may be take values from 0 to 1) have multiple local optima

Thus, a multi-start type solution heuristic won't be able to stop searching at first local optimum found

We will need experience to determine how long to keep searching for alternate solutions

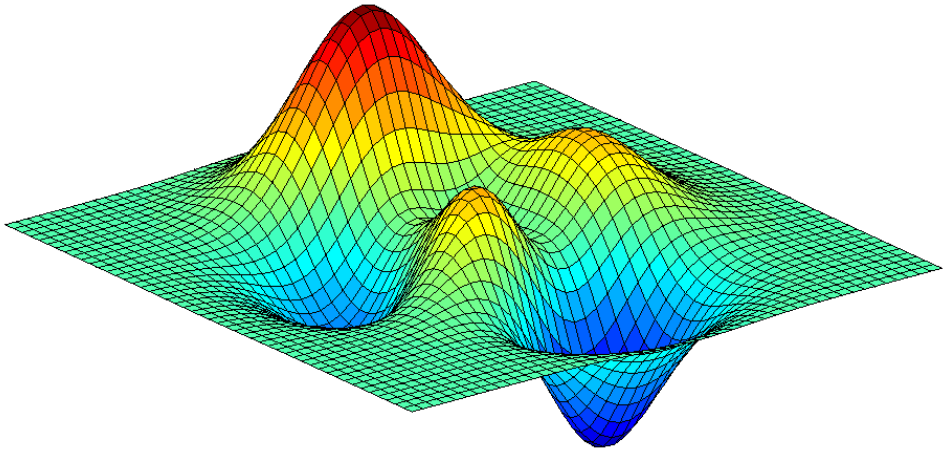

Start Simple?

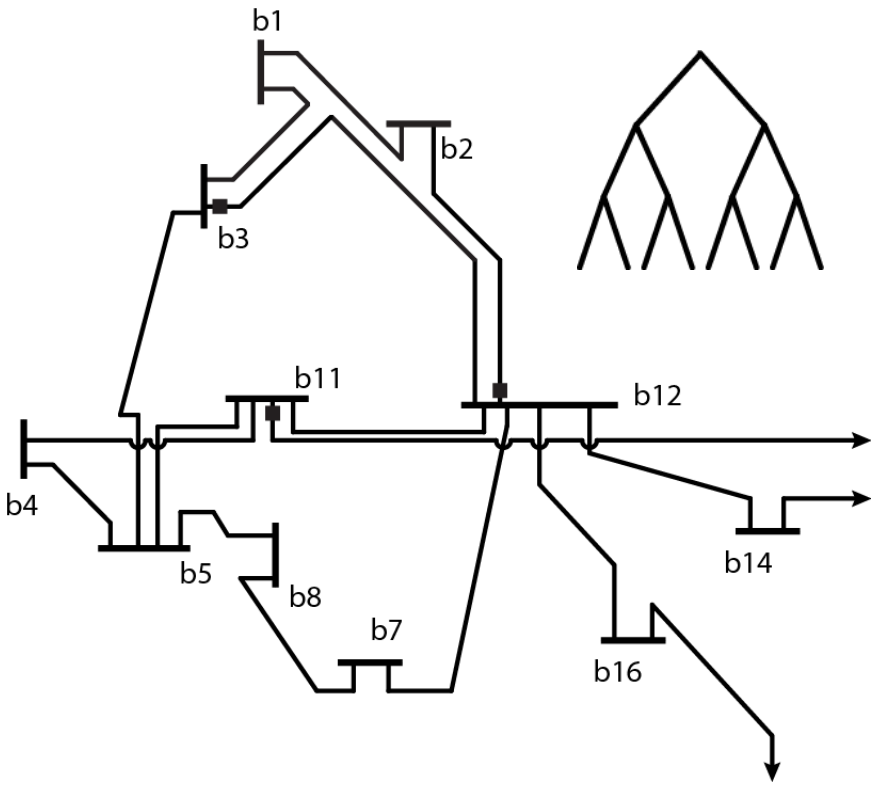

Do we need/want full system OTS (with switches on every or most lines)?

Most gains from switching might be achieved by installing and controlling just a few switches (see slide 4)

Small branch-and-bound trees could even be fathomed through brute force, if necessary

Simple Starts Still Require Solutions to Complex Problems

Where should we put the few switches we start with?

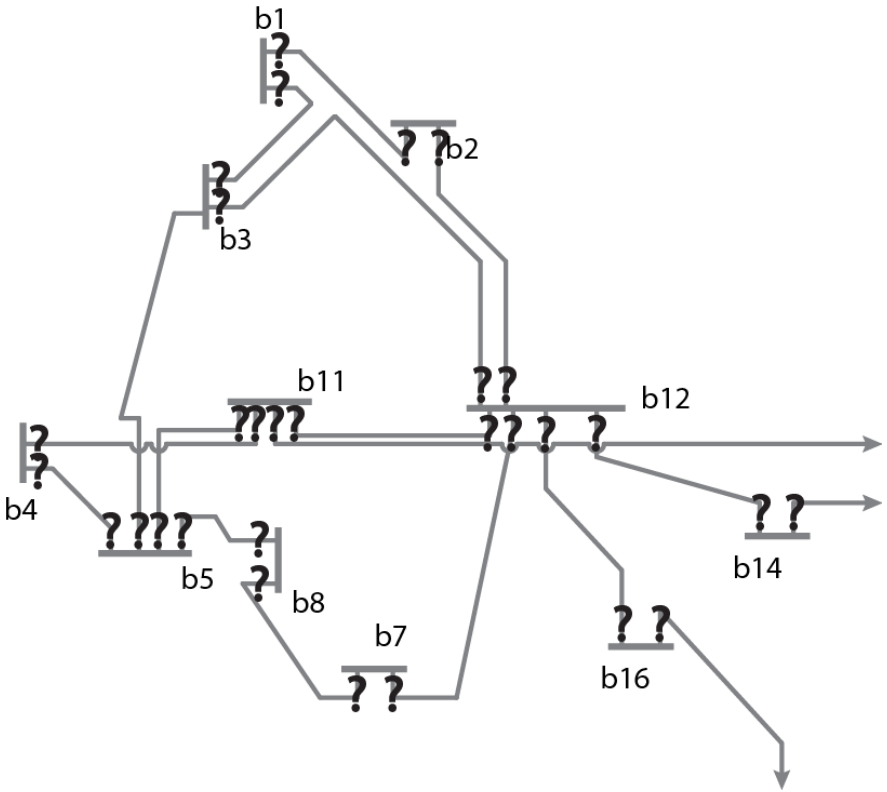

Greater efficiency can be wrung from OTS if we can identify the best places to install transmission switches

But that determination involves the solution to a complex planning problem, probably a full-scale OTS-type problem with many switch options embedded into a production cost simulation run over many planning scenarios

So efficient solution to the full-scale switching problem is still important

Data on AC OTS? Not yet…

Solving the mixed-integer nonlinear program (MINLP) has proven difficult

Coming soon…

Can solve some problems on small systems

Can not yet solve for IEEE 14-bus or 118-bus system

However, the MIP scale does not seem to be the problem; rather, appears to be lack of ability to inject “smart” initial guesses into MIP algorithm (no callbacks in mixed-integer nonlinear program (MINLP) solvers)

Can solve individual node relaxations outside of MIP algorithm *if* I supply my own “smart” initial guesses for each homemade multi-start run

MINLP Solver Advancements Desired to Improve AC OTS

Not terribly sophisticated stuff…

- Multi-start capability for each node within an MINLP
- Ability to process multi-starts in parallel on multi-core machines
- Ability to run a callback script before each multi-start in order to insert “smart” initial guesses
- Ability to run a callback script before each branch and bound node in order to run fast island detection algorithm or other processes
- Ability to specify an initial breadth search of MIP branch-and-bound tree (say, all integer nodes where only one switch is open) to quickly identify good quality upper bounds on problem
- Ability to parameterize fixed variables

“Smart” Initial Guesses

Useful for any general AC OPF problem, but crucial for AC OTS

More effective approaches require callback functionality within the branch-and-bound tree, and actually within each multi-start of each node

Various approaches, including…

1) Persistence
   - For sequential market clearing, use last period’s solution to initialize this period’s variables (less useful for switching or unit-commitment, where the system changes significantly)
2) B-θ (DC OPF) or simplified AC formulations (e.g., decoupled AC)
   - Initialize variables to AC problem based on output from the easier DC problem

(continued next slide)

“Smart” Initial Guesses

Various approaches (continued)

3) Random voltage-based initialization (what I am currently using)
   - Start by guessing voltage magnitude and angle values (draw from some distribution over the variable bounds)
   - Use random V and θ guesses to compute “smart” initial guesses for real and reactive line flows using AC power flow equations
   - This approach ensures that V and θ guesses are at least *consistent with* the real and reactive power flow guesses

4) Hybrid approach?
   - Looking at hybrid of (2) and (3)

Any sophisticated initial guess approach coupled with a multi-start heuristic requires some form of callback ability prior to each multi-start. This makes current packaged multi-start features unusable in AC OTS.

Anti-Islanding Cuts to Improve AC Optimal Transmission Switching

Observe that overwhelmingly most of possible switching configurations isolate or “island” one or more portions of the system

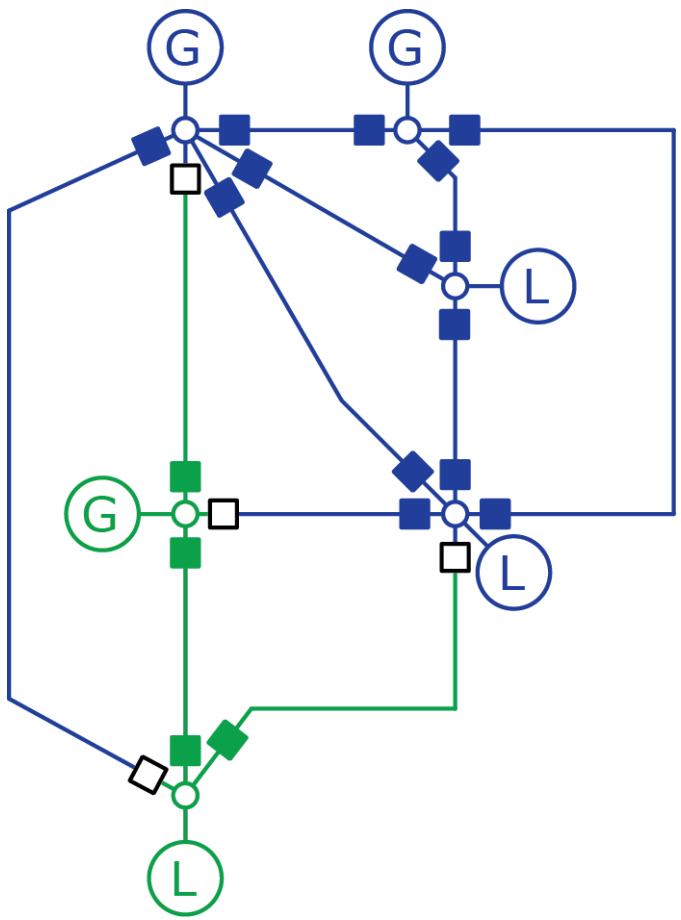

Working hypothesis is that islanded configurations are usually or almost always suboptimal

Also reliability issues with islanding portions of system

Likely no need to consider such configurations during optimization

Island Detection Algorithms

For instance:

Shin, Mancheol, and Kernjoong Kim. Advanced Method of Island Detection in Network Using Matrix and Vector. *IEEE Power and Energy Engineering Conference (APPEEC), 2010 Asia-Pacific*, pp. 1-4, March 2010.

	1	2	3	4	5
1		1		1	
2	1		1		
3		1		1	
4	1		1		1
5				1	

Uses column-wise search of binary version of Ybus matrix (with 1 values where non-diagonal entries in Ybus are non-zero, and 0 otherwise)

However, requires callback functionality in nodes of branch-and-bound tree (not currently available in MINLP solvers)

In the meantime… can add anti-islanding cuts to OTS formulation

“First Level” Anti-Islanding (FLAI) Cuts

Require that, for each bus, at least one of the transmission lines connecting that bus to adjacent buses is fully switched in

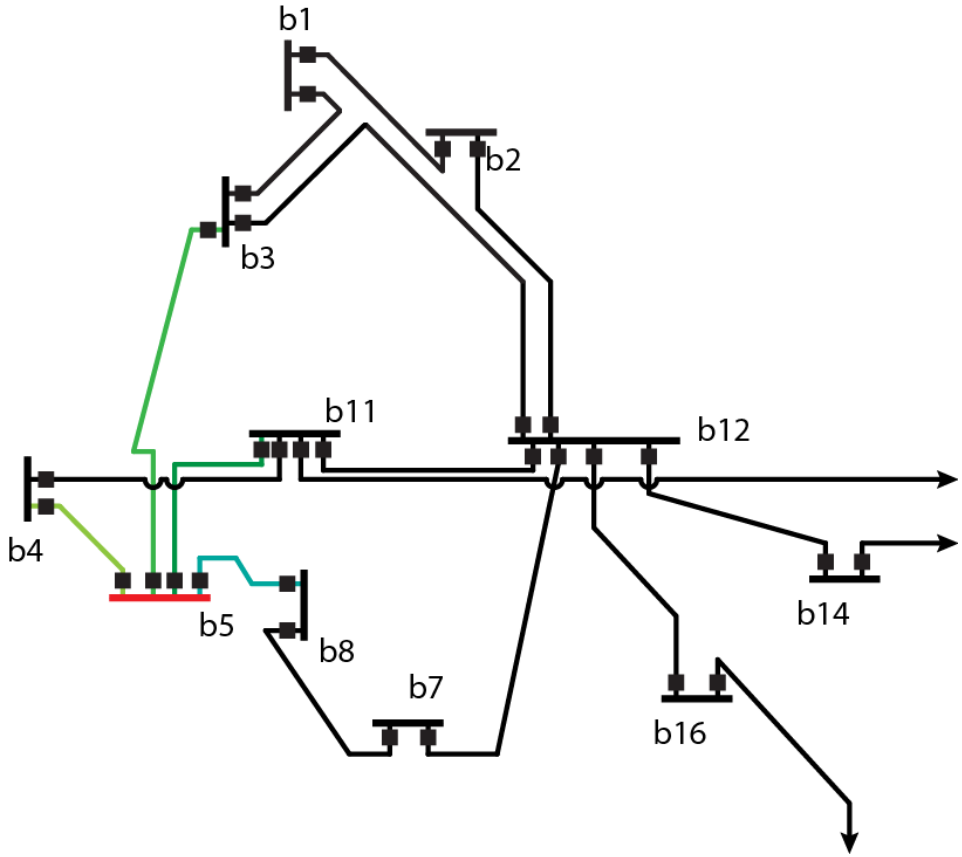

“First level” refers to the fact that we only look one step to the immediately adjacent buses for connectivity

Does not ensure that <u>no</u> islanding takes place; only that no <u>individual</u> bus is islanded

But eliminates consideration of a huge number of configurations

“Second Level” Anti-Islanding (SLAI) Cuts

Require that, for each bus, at least one of the transmission paths (e.g., see colored paths for Bus b5 below) consisting of two adjacent transmission lines connecting to that bus to two adjacent buses is fully switched in

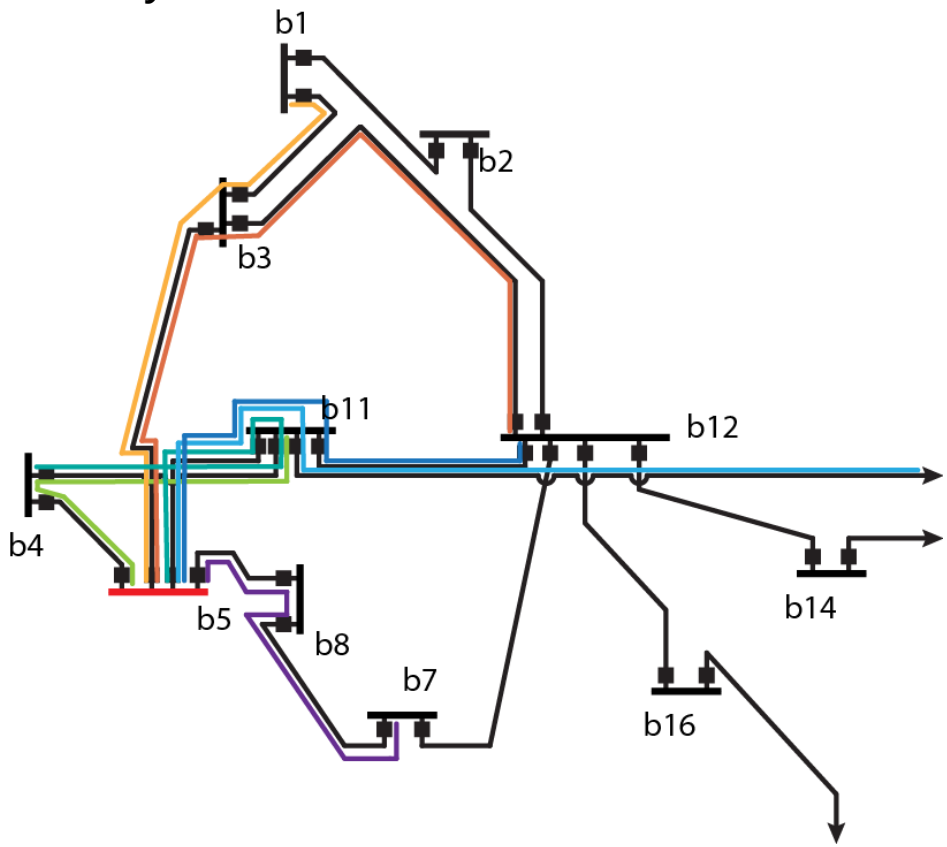

“Second level” refers to the fact that we only look two steps to the two most immediately adjacent buses for connectivity

Again, does not ensure that no islanding takes place; just that every bus is connected to at least one bus that is “two steps” away

Eliminates from consideration all configurations that would be eliminated by FLAI, plus many others (with some problems; see next slide)

Anti-Islanding Effectiveness

We investigated the effectiveness of different AI methods using a Matlab script to test large numbers of random switching configurations (data reported on next slide)

Note that SLAI is problematic on small systems. When one or more buses are directly connected to all other buses, SLAI will cut configurations that do not actually represent islanding. (Similar problems will arise for any n-Level Anti-Islanding approach, where n is greater than 1, if the number of buses is not significantly greater than n.)

Test system information:

- 3-bus test system is a simple delta configuration
- 5-bus test system is a simple three-delta configuration
- 6-bus test system is the Wood & Wollenberg case (see slides 23 and 24)
- 14 and 118-bus test systems are standard IEEE test systems

Anti-Islanding Effectiveness Data

Model	# of TX Lines	Number of Configurations		Percent Cut		
		Total Possible	Investigated	FLAI	SLAI	Perfect (using Shin & Kim)
3-bus	3	64	all	84.375	98.4375†	84.375
5-bus	7	16,385	all	90.5823	95.5261†	95.3613
6-bus	11	4,194,304	all	88.2252	94.0516†	95.1227
14-bus	20	1.1 trillion	500 million	99.9001	99.9945	99.9994
118-bus	186	6.3E116	500 million	>99.9999995*	>99.9999995*	>99.9999995*

†For reasons discussed on the previous slide, percentages reported above for SLAI on the small systems reflect cuts to some configurations which are not actually islanded configurations.

*No non-islanding configurations were identified in any of the random 500 million configurations examined for the IEEE 118-bus model

Questions?