A Market-based Approach to Power System Expansion Planning

Technical Appendix

Anatoly I. Lazebnik, Aleksandr Rudkevich, Igor S. Sorokin

Presentation at the FERC Technical Conference on Planning Models and Software

Washington, DC, June 10, 2010

Model Formulation

Representation of the Bulk Power System

We consider a DC linearized lossless[1] representation of the power system such that the power flows f on transmission facilities and flowgates are represented by the following equation

$$f(t,\omega) = f^o(t) + \Psi[p(t,\omega) - p^o(t) - (L(t,\omega) - L^o(t))] \quad (1)$$

where the superscript ^{o} indicates a base case power flow quantity, and p and L are the vectors of nodal power injections and loads, respectively. The power system is considered over time and under multiple stochastic scenarios.

For the purpose of this paper, we assume that the vector of power injections includes both actual physical injections by generating resources and virtual injections in the form of controllable by a system operator demand response measures. These physical generating resources and demand response measures are commonly referred to as generation resources, or resources for short, characterized by their capacities, availabilities and low bound operational limitations, as discussed below.

Time spans over the planning horizon $0 \le t \le T$.

For the purpose of this paper, a finite number of stochastic scenarios numbered by $\omega = 1, 2, ..., N$ is considered, where N is the total number of stochastic scenarios with

[1] Losses are assumed to be accounted for in the demand vector **L**

probabilities[2] $\pi(\omega) \geq 0$ and $\sum_{\omega=1}^{N} \pi(\omega) = 1$. Demand requirements, resource availability and transmission topology may change over time and these changes vary by stochastic scenario.

The base power flow parameters and the power flow itself caused by system conditions are dependent on time *t*. The transmission sensitivity matrix Ψ gives the variations in flows due to changes in the nodal injections, with the reference bus assumed to ensure the real power balance. This matrix could also depend on time and be subject to random perturbations due to transmission line outages.

The system is considered under load conditions represented by a vector stochastic process $L(\omega, t)$. Power flows represented by equation (1) must remain within security limits of the predetermined set of flowgates. Flowgate limits are also considered stochastic and time-dependent:

$$\underline{f}(t,\omega) \leq f \leq \overline{f}(t,\omega) \tag{2}$$

In general, the upper limits of all flowgates are non-negative, and lower limits of flowgates are non-positive:

$$\underline{f}(t,\omega) \leq 0,\ \overline{f}(t,\omega) \geq 0 \tag{3}$$

Power injections by resources are bounded from above by the rated resource capacities and resource availabilities. The level of resource availability varies by stochastic scenario and over time. Power injections of resources could also be bound from below by operational constraints:

$$\underline{S}(t,\omega)X \leq p(t,\omega) \leq \overline{S}(t,\omega)X \tag{4}$$

where *X* is a vector of rated capacities. Stochastic resource availabilities and per unit low bound operational limitations are positioned on diagonals of matrices $\overline{S}(t,\omega)$ and $\underline{S}(t,\omega)$, respectively, while all other elements of these matrices are zeros. Upper limits of resource availability and its low bound operational limitation are in order:

$$0 \leq \underline{s}_{ii}(t,\omega) \leq \overline{s}_{ii}(t,\omega) \leq 1 \tag{5}$$

In addition to resources and load, for each bus we define a non-negative value of unserved energy represented by vector *u* such that the system balance, security and load interruption feasibility equations take the following form, respectively:

[2] Typically, when scenarios are generated through a Monte-Carlo process, all scenarios have the same probability equal 1/*N*. A more sophisticated modeling techniques may rely on a pre-selection of most informative scenarios and in this case probabilities may vary by scenario.

$$e^T(p(t,\omega)+u(t,\omega)-L(t,\omega))=0 \tag{6}$$

$$\underline{F}(t,\omega)\le\Psi(t,\omega)[p(t,\omega)+u(t,\omega)-L(t,\omega)]\le\overline{F}(t,\omega) \tag{7}$$

Here

$$\begin{aligned}\overline{F}&=\overline{f}-f^o+\Psi[p^o-L^o]\\ \underline{F}&=\underline{f}-f^o+\Psi[p^o-L^o]\end{aligned} \tag{8}$$

Assuming that the linearization is sufficiently precise, and due to (3), we can postulate that

$$\underline{F}(t,\omega)\le 0,\overline{F}(t,\omega)\ge 0 \tag{9}$$

$$0\le u(t,\omega)\le l(t,\omega) \tag{10}$$

and

$$e^T=\begin{pmatrix}1 & 1 & \dots & 1\end{pmatrix}$$

The load shedding limits[3] in (10) are assumed to be known, albeit time and scenario dependent, parameters bounded by the total demand

$$l(t,\omega)\le L(t,\omega) \tag{11}$$

Representation of a Service Interruption

For each realization of random variable ω the bulk power system is capable of providing non-interrupted services to all its elements if and only if a system of equations and inequalities (4)-(10) have a feasible solution such that $u=0$. If such a solution does not exist, a service interruption in the system is unavoidable.

A detection of a service interruption could be obtained by finding a set of resource injections and load shedding minimizing the total volume of unserved energy

$$\min UE(t,\omega)=e^T u(t,\omega) \tag{12}$$

[3] This constraint implicitly assumes an infinitely large VOLL associated with load being reduced below the set level.

subject to constraints (6)-(10). If the solution results in the value of objective function $UE(t,\omega)=0$, service interruption can be avoided. If the optimal value of the objective function (12) turns out to be positive, service interruption is unavoidable. The solution to this optimization problem could be called a reliability dispatch. For each optimal reliability dispatch, one can determine locational dual variables

$$\mu UE(t,\omega)=\frac{\partial UE(t,\omega)}{\partial L} \tag{13}$$

which can be interpreted as Marginal Unserved Energy. By averaging equation (13) across all stochastic scenarios, we defined Marginal Expected Unserved Energy (MEUE) as

$$MEUE(t)=\frac{\partial EUE(t)}{\partial L} \tag{14}$$

where

$$\begin{aligned} EUE(t)&=\mathbf{E}\left[UE(t,\omega)\right]=\sum_{\omega=1}^{N}\pi(\omega)UE(t,\omega)\\ MEUE(t)&=\mathbf{E}\left[\mu UE(t,\omega)\right] \end{aligned} \tag{15}$$

Equations (13)-(14) deserve additional discussion. Let us assume that under all stochastic scenarios, no transmission constraint binds. Under this assumption, $\mu UE(t,\omega)$ will be the same for every bus in the power system, $\mu UE(t,\omega)=0$ for all scenarios in which there is no service interruption and $\mu UE(t,\omega)=e$ (increasing demand by 1 MW will increase the level of unserved energy by exactly 1 MW) for all scenarios with service interruption. From this, it is obvious, that in the absence of transmission constraints the Marginal Expected Unserved Energy at all locations will be equal to the probability to experience a service interruption, otherwise known as a Loss of Load Probability (LOLP). In other words, in the absence of transmission constraints, equation (14) becomes a well known formula:

$$LOLP(t)=\frac{\partial EUE(t)}{\partial L_{\Sigma}} \tag{16}$$

(In this case the derivative is taken by the total demand such that we have scalar variables in both sides of the equation).

However, in a system with transmission constraints, equation (16) does not hold.

As demonstrated in the second part of this paper, indicator MEUE is directly related to what we call a Locational Stochastic Reliability Price (LSRP) playing an important role in making optimal system expansion decisions and therefore should be considered an adequate generalization of the concept of LOLP for constrained systems.

The Optimal Capacity Selection Problem

We assume that the selection of generation capacity is conducted through an auction in which the Auctioneer in order to maintain an economically justified reliable operation of the power system solicits offers from existing and prospective generation owners and demand response service providers commonly referred to as resource providers

Resources

For each unit of offered resource capacity the following information is provided to the Auctioneer:

- Capacity location on the electrical grid (bus number *j*)
- Maximum capacity offered Y_j (in MW)
- Per unit capacity payment required c_j

In addition, for each offered resource the Auctioneer obtains statistical parameters upon which it can develop availability and low bound operational limitation scenarios. These scenarios are combined in matrices $\overline{S}(t,\omega), \underline{S}(t,\omega)$. The Auctioneer selects a mix of capacities that could be deployed over the entire planning horizon $0 \le t \le T$.

For the purpose of this paper, we make the following simplifying assumptions:

- All offered resources could be placed into service at the beginning of the planning horizon;
- The Auctioneer is not required to select the entire size of the offered capacity Y_j and can choose any portion of it.

Economic Model of Load Shedding

In the simplest case we assume that for each location, the Auctioneer has an estimate of the instantaneous value of loss load (VOLL) which is assumed to remain constant over time, but could be different for different locations. The vector of VOLL values for all locations is denoted as V. For example, locational VOLL values could be set administratively either uniformly for the entire system or vary by location based on particular economic and policy considerations[4].

The model of load shedding could be further expanded by assigning levels of VOLL increasing with the depth of service interruption at a given location. In this case values of

[4] Theoretically it is conceivable, that the vector of VOLL values could be specified by Load Serving Entities (LSEs). However, this assumption requires further theoretical consideration which is beyond the scope of this paper.

VOLL are specified as a step function: load reduction at node *j* up to l_j^1 is valued at V_j^1, reduction between l_j^1 and l_j^2 is valued at V_j^2 where $l_j^1 < l_j^2$ and $V_j^1 < V_j^2$ and so on. Such step-function might be represented by creating multiple nodes attached to the same bus, each with its own demand and VOLL. Similar models would emerge in the event of multiple load serving entities, each with its own demand profile and VOLL but connected to the same bus.

Auctioneer's Optimization Problem

The Auctioneer's objective function is to minimize the total cost of maintaining the economically justified reliable operation of the power system. This objective functions consists of two parts – the cost of procured mix of resources and the expected cost of unserved load.

$$R = c^T X + \mathbf{E}[VUE] \tag{17}$$

Here $\mathbf{E}[VUE]$ represents the expected value of unserved energy equal to

$$\mathbf{E}[VUE] = \sum_{\omega=1}^{N} \pi(\omega) \int_0^T V^T u(t,\omega) dt \tag{18}$$

The Auctioneer's goal is

$$\min R = c^T X + \sum_{\omega=1}^{N} \pi(\omega) \int_0^T V^T u(t,\omega) dt \tag{19}$$

The Auctioneer determines the optimal resource mix subject to the following constraints.

1. Maintaining the energy balance in each hour under each stochastic scenario, subject to potential service interruptions:

$$e^T (p(t,\omega) + u(t,\omega) - L(t,\omega)) = 0 \quad \perp \quad \lambda(t,\omega) \tag{20}$$

2. Maintaining the security of the transmission system:

$$\underline{F}(t,\omega) \le \Psi(t,\omega)[p(t,\omega) + u(t,\omega) - L(t,\omega)] \le \overline{F}(t,\omega) \quad \perp \quad -\underline{\mu}(t,\omega) \le 0, \overline{\mu}(t,\omega) \ge 0 \tag{21}$$

3. Operating each resource within the limits of capacity procured at the auction and subject to generator's availability and low bound operational limitations[5]:

$$\underline{S}(t,\omega)X \le p(t,\omega) \le \overline{S}(t,\omega)X \perp \quad -\underline{\alpha}(t,\omega) \le 0, \overline{\alpha}(t,\omega) \ge 0 \tag{22}$$

4. Unserved energy is non-negative and cannot exceed allowed load shedding limits $l(t,\omega) \le L(t,\omega)$:

$$0 \le u(t,\omega) \le l(t,\omega) \quad \perp \quad -\underline{\theta}(t,\omega) \le 0, \overline{\theta}(t,\omega) \ge 0 \tag{23}$$

5. Procured capacity does not exceed capacity offered:

$$0 \le X \le Y \perp \quad -\underline{\beta} \le 0, \overline{\beta} \ge 0 \tag{24}$$

In order to formulate the optimality conditions, we define the Lagrangian Λ of the Auctioneer's problem (19) - (23).

$$\begin{aligned}
\Lambda &= c^T X + \sum_{\omega=1}^{N} \pi(\omega) \int_0^T V^T u(t,\omega) dt \\
&- \sum_{\omega=1}^{N} \pi(\omega) \int_0^T \lambda(t,\omega) e^T (p(t,\omega) + u(t,\omega) - L(t,\omega)) dt \\
&+ \sum_{\omega=1}^{N} \pi(\omega) \int_0^T \overline{\mu}^T(t,\omega) \left[\Psi(p(t,\omega) + u(t,\omega) - L(t,\omega)) - \overline{F}(t,\omega) \right] dt \\
&- \sum_{\omega=1}^{N} \pi(\omega) \int_0^T \underline{\mu}^T(t,\omega) \left[\Psi(p(t,\omega) + u(t,\omega) - L(t,\omega)) - \underline{F}(t,\omega) \right] dt \\
&+ \sum_{\omega=1}^{N} \pi(\omega) \int_0^T \overline{\alpha}^T(t,\omega) \left[p(t,\omega) - \overline{S}(t,\omega) X \right] dt - \sum_{\omega=1}^{N} \pi(\omega) \int_0^T \underline{\alpha}^T(t,\omega) \left[p(t,\omega) - \underline{S}(t,\omega) X \right] dt \\
&+ \sum_{\omega=1}^{N} \pi(\omega) \int_0^T \overline{\theta}^T(t,\omega)(u(t,\omega) - l(t,\omega)) dt - \sum_{\omega=1}^{N} \pi(\omega) \int_0^T \underline{\theta}^T(t,\omega) u(t,\omega) dt \\
&+ \overline{\beta}^T (X - Y) - \underline{\beta}^T X
\end{aligned} \tag{25}$$

The KKT Optimality Conditions

[5] In most cases for the purpose of the capacity procurement auction low bound operational limitations could be ignored: water on a hydro plant could be spilled, wind can be curtailed and excess thermal generator simply would not be committed. We, however, include these low bound constraints for the sake of generality.

Stationarity Conditions

$$\frac{\partial \Lambda}{\partial X} = 0 \leftrightarrow c^T + \overline{\beta}^T - \underline{\beta}^T - \sum_{\omega=1}^{N} \pi(\omega) \int_0^T \overline{\alpha}^T(t,\omega)\overline{S}(t,\omega)dt + \sum_{\omega=1}^{N} \pi(\omega) \int_0^T \underline{\alpha}^T(t,\omega)\underline{S}(t,\omega)dt = 0$$
$$c = \sum_{\omega=1}^{N} \pi(\omega) \int_0^T \left[\overline{S}(t,\omega)\overline{\alpha}(t,\omega) - \underline{\alpha}^T(t,\omega)\underline{S}(t,\omega) \right] dt - \overline{\beta} + \underline{\beta} \tag{26}$$

$$\frac{\partial \Lambda}{\partial u(t,\omega)} = 0 \leftrightarrow$$
$$V^T - \lambda(t,\omega)e^T + (\overline{\mu}^T(t,\omega) - \underline{\mu}^T(t,\omega))\Psi + \overline{\theta}^T(t,\omega) - \underline{\theta}^T(t,\omega) = 0 \tag{27}$$
$$-\left[\overline{\theta}(t,\omega) - \underline{\theta}(t,\omega) \right] = V - \lambda(t,\omega)e + \Psi^T(\overline{\mu}(t,\omega) - \underline{\mu}(t,\omega))$$

$$\frac{\partial \Lambda}{\partial p(t,\omega)} = 0 \leftrightarrow$$
$$-\lambda(t,\omega)e^T + (\overline{\mu}^T(t,\omega) - \underline{\mu}^T(t,\omega))\Psi + (\overline{\alpha}^T(t,\omega) - \underline{\alpha}^T(t,\omega)) = 0 \tag{28}$$
$$\lambda(t,\omega)e - \Psi^T(\overline{\mu}(t,\omega) - \underline{\mu}(t,\omega)) = (\overline{\alpha}(t,\omega) - \underline{\alpha}(t,\omega))$$

Complementarity Conditions

$$\left[[p(t,\omega) + u(t,\omega) - L(t,\omega)]^T \Psi^T - \overline{F}^T(t,\omega) \right] \overline{\mu}(t,\omega) = 0$$
$$-\left[[p(t,\omega) + u(t,\omega) - L(t,\omega)]^T \Psi^T - \underline{F}(t,\omega) \right] \underline{\mu}(t,\omega) = 0 \tag{29}$$

$$\left[p^T(t,\omega) - X^T \overline{S}(t,\omega) \right] \overline{\alpha}(t,\omega) = 0$$
$$-\left[p^T(t,\omega) - X^T \underline{S}(t,\omega) \right] \underline{\alpha}(t,\omega) = 0 \tag{30}$$

$$\overline{\theta}^T(t,\omega)(u(t,\omega) - l(t,\omega)) = 0$$
$$\underline{\theta}^T(t,\omega)u(t,\omega) = 0 \tag{31}$$

$$(X^T - Y^T)\overline{\beta} = 0$$
$$-X^T \underline{\beta} = 0 \tag{32}$$

Optimal Capacity Selection

Based on conditions (26) and (32), capacity X_j will be:

- selected at full offered volume ($X_j = Y_j$) if and only if

$$c_j < \sum_{\omega=1}^{N} \pi(\omega) \int_0^T \left[\overline{S}_{jj}(t,\omega)\overline{\alpha}_j(t,\omega) - \underline{S}_{jj}(t,\omega)\underline{\alpha}_j(t,\omega) \right] dt \tag{33}$$

- rejected ($X_j = 0$) if and only if

$$c_j > \sum_{\omega=1}^{N} \pi(\omega) \int_0^T \left[\overline{S}_{jj}(t,\omega)\overline{\alpha}_j(t,\omega) - \underline{S}_{jj}(t,\omega)\underline{\alpha}_j(t,\omega) \right] dt \tag{34}$$

- accepted partially ($0 \le X_j \le Y_j$) if and only if

$$c_j = \sum_{\omega=1}^{N} \pi(\omega) \int_0^T \left[\overline{S}_{jj}(t,\omega)\overline{\alpha}_j(t,\omega) - \underline{S}_{jj}(t,\omega)\underline{\alpha}_j(t,\omega) \right] dt \tag{35}$$

Based on (33)-(35), it is logical to define the resource capacity price (RCP) as

$$RCP_j = \sum_{\omega=1}^{N} \pi(\omega) \int_0^T \left[\overline{S}_{jj}(t,\omega)\overline{\alpha}_j(t,\omega) - \underline{S}_{jj}(t,\omega)\underline{\alpha}_j(t,\omega) \right] dt \tag{36}$$

Based on the above definition, the resource capacity price should be applied to the total capacity of the resource procured at the auction.

Reliability Dispatch and Locational Stochastic Reliability Price

LRSPs Defined

For any given set of selected capacities, optimal reliability dispatch for a given stochastic scenario is the dispatch which minimizes the cost of unserved load. At a given moment in time on each stochastic scenario, the objective function of reliability dispatch is to minimize

$$\min V^T u(t,\omega) \tag{37}$$

subject to constraints (20)-(23).

It is not difficult to observe that satisfying conditions (27) - (31) assure optimal reliability dispatch of the power system at any given moment in time in each stochastic scenario. Optimal dispatch yields an optimal locational price – a reduction in the total cost of unserved energy in response to the marginal reduction in locational demand. The underlying mathematics of this locational price is identical to that of the Locational Marginal Price (LMP) resulting from the optimal economic dispatch. However, in this case, the considered dispatch of the system is not an economic dispatch, but a reliability dispatch. Hence we will call the corresponding value of the locational price the *Locational Stochastic Reliability Price* (LSRP). This term reflects that the price is locational, that it corresponds to the reliability dispatch and that it is stochastic because it depends not only on time and location, but also on the stochastic scenario of system operation ω.

Similarly to the definition of LMPs, the vector of LSRPs is determined as

$$LSRP(t,\omega) = \lambda(t,\omega)e - \Psi^T(t,\omega)(\bar{\mu}(t,\omega) - \underline{\mu}(t,\omega)) \tag{38}$$

Using this definition, we establish the relationship between LSRPs and dual variables $\underline{\alpha}(t,\omega), \bar{\alpha}(t,\omega)$. From (28) and (30) we derive that:

- if $\bar{\alpha}_j(t,\omega) > 0$ then $\underline{\alpha}_j(t,\omega) = 0$, resource *j* is dispatched at full level of available procured capacity $p_j(t,\omega) = X_j\bar{S}_{jj}(t,\omega)$ and $\bar{\alpha}_j(t,\omega) = LSRP_j(t,\omega)$.

- Similarly, if $\underline{\alpha}_j(t,\omega) > 0$ then $\bar{\alpha}_j(t,\omega) = 0$, the resource is forced to operate at the lowest point $p_j(t,\omega) = X_j\underline{S}_{jj}(t,\omega)$ and $-\underline{\alpha}_j(t,\omega) = LSRP_j(t,\omega)$.

- Finally, if both $\bar{\alpha}_j(t,\omega) = 0$ and $\underline{\alpha}_j(t,\omega) = 0$, then the resource *j* is dispatched as marginal and the LSPR at that resource's location equals zero. Based on this discussion, we can conclude that

$$\bar{\alpha}(t,\omega) = \max\left[0, LSRP(t,\omega)\right] \tag{39}$$

$$\underline{\alpha}(t,\omega) = \max\left[0, -LSRP(t,\omega)\right] \tag{40}$$

Indeed, if $LSRP_j(t,\omega) > 0$ it is equal to $\bar{\alpha}_j(t,\omega)$. If $LSRP_j(t,\omega) = 0$, then both $\bar{\alpha}_j(t,\omega) = 0$ and $\underline{\alpha}_j(t,\omega) = 0$ and if $LSRP_j(t,\omega) < 0$ then $\bar{\alpha}_j(t,\omega) = 0$ and $\underline{\alpha}_j(t,\omega) = -LSRP_j(t,\omega)$ and therefore (39) and (40) always hold.

A Relationship between Resource Capacity Prices and LSRPs

By combining (39) with (36) we obtain the following relationship between RCPs and LSRPs

$$RCP = \sum_{\omega=1}^{N} \pi(\omega) \int_0^T \left[\overline{S}(t,\omega) \max\left[0, LSRP(t,\omega)\right] - \underline{S}(t,\omega) \max\left[0, -LSRP(t,\omega)\right] \right] dt \quad (41)$$

Or, replacing the averaging across scenarios with the expected value notation, we obtain a more general formula which holds for both finite and infinite sets of stochastic scenarios:

$$RCP = \int_0^T \mathbf{E}\left[\overline{S}(t,\omega) \max\left[0, LSRP(t,\omega)\right] \right] dt - \mathbf{E} \int_0^T \underline{S}(t,\omega) \max\left[0, LSRP(t,\omega)\right] dt \quad (42)$$

The expression $\mathbf{E}\left[\overline{S}_{jj}(t,\omega) \max\left[0, LSRP_j(t,\omega)\right] \right]$ could be interpreted as the *value of the option to use one unit of the generating resource when it is needed*. The expression $\mathbf{E}\left[\underline{S}_{jj}(t,\omega) \max\left[0, -LSRP_j(t,\omega)\right] \right]$ could be interpreted as the *cost of the obligation to use one unit of the generating resource when it is not needed*.

Formula (42) therefore determines resource capacity price as the difference between the total over time value of option to use the resource when it is needed and the total over time cost of obligation to use the resource when it is not needed. According to this formula, a resource is compensated for its contribution to system reliability only to the extent it is available at the time of need: for example if at the time of need (i.e. LSRP at resource's location is positive) it is available in 50%, it will be compensated only by 50% of the LSRP. If due to a low bound operational limitation the resource has to be used at the time when it is not needed (i.e. LSRP at resource's location is negative) the resource will be negatively affecting system reliability by increasing the overall value of unserved energy and will be charged for that.

LSRPs and Nodal Economics of Load Shedding

Next we explore the locational economic properties of LSRPs. Because in the reliability dispatch the cost of each generator is effectively zero, in absence of energy shortage, i.e. if $u(t,\omega) = 0$, the LSRPs are equal to zero at all locations. Indeed, because of the zero price of marginal generation, the cost of congestion redispatch is zero and the system lambda must also equal zero. In contrast to LMPs, whose properties are primarily driven by the economics of nodal generation dispatch, the properties of LSRPs are primarily

driven by the economics of energy rationing at times of shortage. Thus, only the instances of shortage are of interest here.

Assuming that a supply shortage is observed at node *j* on scenario ω at time moment *t*, but the load reduction is properly within bounds, i.e. $0 < u_j(t,\omega) < l_j(t,\omega)$, then due to (31) both shadow prices $\underline{\theta}_j(t,\omega) = 0$ and $\overline{\theta}_j(t,\omega) = 0$. Combining this with (27) yields that

$$LSRP_j(t,\omega) = V_j \tag{43}$$

In other words, at the location of shortage where load is partially shed, the LSRP must equal VOLL.

If the load at a given location has to be fully reduced ($u_j(t,\omega) = l_j(t,\omega)$), then the LSRP may exceed the locational VOLL

$$LSRP_j(t,\omega) = V_j + \overline{\theta}_j(t,\omega) > V_j \tag{44}$$

If the load is being shed at one location in the system, it will influence LSRPs at all other locations, as follows from equation (38).

In a special case when the optimal solution of the reliability dispatch does not result in binding transmission constraints, then shadow prices for these transmission constraints will be equal to zero and therefore, as follows from (38), the LSRP will be the same at all locations. Under these conditions load shedding will occur in order of increasing VOLL and the location with the highest VOLL among those where the load is being shed will set the LSRP for the entire system. Thus, in absence of transmission congestion

$$LSRP_j(t,\omega) = \max_{j:u_j(t,\omega)>0} V_j \tag{45}$$

An important case in which the value of lost load is assumed to be the same for all locations deserves special consideration. In this case equation (45) could be simplified

$$LSRP_j(t,\omega) = VOLL \tag{46}$$

In this case, the reliability dispatch problem is equivalent to earlier considered problem of minimizing the volume of unserved energy. Indeed, the value of unserved energy is simply the product of the volume of unserved energy and VOLL. Therefore, in this case LSRPs and μEUE are also proportional to each other:

$$LSRP(t,\omega) = VOLL \times \mu EUE(t,\omega) \tag{47}$$

In a more general case, when optimal reliability dispatch results in constrained transmission, values of LSRPs may significantly vary by location. Examples provided at the end of this paper illustrate this behavior of LSRPs.

Overall Auction Outcome

In this section we consider the overall auction outcome not only in terms of prices but also in terms of resource receipts and load payments.

Resource Receipts

A resource at location *j* receives the payment of

$$RR_j = X_j RCP_j \tag{48}$$

The sum of all resource receipts is equal to

$$RR_\Sigma = X^T RCP \tag{49}$$

Load Payments

At each load location *j* load is assumed to be paying in accordance with the following formula:

$$LP_j = \sum_{\omega=1}^{N} \pi(\omega) \int_0^T LSRP_j(t,\omega)\left[L_j(t,\omega) - u_j(t,\omega)\right]dt \tag{50}$$

Or more generally

$$LP_j = \mathbf{E}\int_0^T LSRP_j(t,\omega)\left[L_j(t,\omega) - u_j(t,\omega)\right]dt \tag{51}$$

And the total amount of payments collectable from all loads participating in the auction will be equal to

$$LP_\Sigma = \mathbf{E}\int_0^T \left[L(t,\omega) - u(t,\omega)\right]^T LSRP(t,\omega)dt \tag{52}$$

Let's assume now that D_j is the forecast peak demand for location *j*. Sometimes D_j is defined as a median value of locational peak:

$$\Pr\left[\max_t L_j(t,\omega) < D_j\right] = 1/2 \tag{53}$$

Using locational peak demands as a representation of load capacity requirements[6], it is now possible to define the Load Capacity Price (LCP) as

$$LCP_j = \frac{LP_j}{D_j} = \mathbf{E}\int_0^T LSRP_j(t,\omega)\left[\frac{L_j(t,\omega) - u_j(t,\omega)}{D_j}\right]dt \tag{54}$$

And overall load capacity payments resulting from the auction could be expressed as

$$LP_\Sigma = D^T LCP \tag{55}$$

According to formula (54), payments to loads are assessed on the basis of demand realized in a given scenario. Even if two load serving entities receive power at the same location but have either different VOLLs or different demand patterns, they may see different capacity prices. Loads which are less interrupted (for example due to a higher VOLL) will be paying higher capacity prices than loads interrupted more often. If the level of VOLL at the load location is in agreement with load's preference of being interrupted, its load is shed if and only if LSRP at load's location equals VOLL and therefore interruption would not be objected by the load. If in some scenario, the load is interrupted fully, this scenario would not affect load's capacity price at all. This formula provides a fair pricing structure for reliability – *load pays for reliability only "at the time" when there are service interruptions and only to the extent to the extent it is not being interrupted*. "At the time" here does not refer to real time of operation, but to the time period and scenario of simulated reliability dispatch.

This formula also reflects a correlation between LSRPs, demand and the level of interruption.

Congestion Rent

In each combination of time and stochastic scenario when load is being interrupted somewhere, LSRPs are either the same in all locations (in absence of transmission congestion) or vary by location (in the presence of binding transmission constraints).

In the first instance, since the system is in balance in the sense of equation (20) and since all LSRPs are the same, the following identity holds:

$$\left[L(t,\omega) - u(t,\omega)\right]^T LSRP(t,\omega) = p^T(t,\omega) LSRP(t,\omega) \tag{56}$$

However, it is not difficult to demonstrate that

$$p^T(t,\omega) LSRP(t,\omega) = X^T\left[\overline{S}(t,\omega)\max\left[0, LSRP(t,\omega)\right] - \underline{S}(t,\omega)\max\left[0, -LSRP(t,\omega)\right]\right] \tag{57}$$

[6] It is important to note that load payments do not depend on the definition of load capacity requirements as long as those and load capacity prices are consistent with each other in terms of equation (54).

Indeed, in all instances in which injection of resource j is within the open interval $X_j \underline{S}_{jj}(t,\omega) < p_j(t,\omega) < X_j \overline{S}_{jj}(t,\omega)$ stochastic reliability price equals zero, $LSRP_j(t,\omega) = 0$ and identity (57) holds. If $X_j \underline{S}_{jj}(t,\omega) = p_j(t,\omega)$, then $LSRP_j(t,\omega) < 0$ and $-\max\left[0, -LSRP_j(t,\omega)\right] = LSRP_j(t,\omega)$. Similarly, if $p_j(t,\omega) = X_j \overline{S}_{jj}(t,\omega)$, then $LSRP_j(t,\omega) > 0$ and $\max\left[0, LSRP_j(t,\omega)\right] = LSRP_j(t,\omega)$. This proves the identity (57) for all cases. By combining (56) and (57), we obtain that

$$\begin{aligned} &\left[L(t,\omega) - u(t,\omega)\right]^T LSRP(t,\omega) \\ &= X^T \left[\overline{S}(t,\omega)\max\left[0, LSRP(t,\omega)\right] - \underline{S}(t,\omega)\max\left[0, -LSRP(t,\omega)\right]\right] \end{aligned} \tag{58}$$

Identity (58) indicates that in the absence of binding transmission constraints total load payments are exactly equal resource receipts.

If some transmission constraints bind, equation (56) does not hold, but instead the following is true:

$$\begin{aligned} &\left[L(t,\omega) - u(t,\omega)\right]^T LSRP(t,\omega) - p^T(t,\omega) LSRP(t,\omega) \\ &= \left[L(t,\omega) - u(t,\omega) - p(t,\omega)\right]^T \left[\lambda(t,\omega)e - \Psi^T(t,\omega)(\overline{\mu}(t,\omega) - \underline{\mu}(t,\omega))\right] \\ &= \left[L(t,\omega) - u(t,\omega) - p(t,\omega)\right]^T \lambda(t,\omega)e - \left[L(t,\omega) - u(t,\omega) - p(t,\omega)\right]^T \Psi^T(t,\omega)(\overline{\mu}(t,\omega) - \underline{\mu}(t,\omega)) \\ &= -\left[L(t,\omega) - u(t,\omega) - p(t,\omega)\right]^T \Psi^T(t,\omega)(\overline{\mu}(t,\omega) - \underline{\mu}(t,\omega)) \\ &= (\overline{\mu}(t,\omega) - \underline{\mu}(t,\omega))^T \Psi(t,\omega)\left[p(t,\omega) - \left(L(t,\omega) - u(t,\omega)\right)\right] \\ &= (\overline{\mu}(t,\omega) - \underline{\mu}(t,\omega))^T f(t,\omega) = \\ &= \overline{\mu}^T(t,\omega)\overline{F}(t,\omega) - \underline{\mu}^T(t,\omega)\underline{F}(t,\omega) \end{aligned}$$

Since shadow prices for binding constraints are always non-negative and condition (9), we conclude that $\overline{\mu}^T(t,\omega)\overline{F}(t,\omega) - \underline{\mu}^T(t,\omega)\underline{F}(t,\omega)$ is always non-negative and will be positive if and only if the reliability dispatch results in binding transmission constraints. This value represents a non-negative stochastic congestion rent in time period *t* realized in a given scenario

$$CR(t,\omega) = \overline{\mu}^T(t,\omega)\overline{F}(t,\omega) - \underline{\mu}^T(t,\omega)\underline{F}(t,\omega) \geq 0 \tag{59}$$

Congestion rent arising in the outcome of the auction will therefore equal to

$$CR_{\Sigma} = \mathbf{E}\int_{0}^{T}\left[\overline{\mu}^{T}(t,\omega)\overline{F}(t,\omega) - \underline{\mu}^{T}(t,\omega)\underline{F}(t,\omega)\right]dt \tag{60}$$

and because of (59)

$$CR_{\Sigma} \geq 0 \tag{61}$$

The above discussion can therefore be summarized in the following identity

$$\begin{aligned} LP_{\Sigma} &= RR_{\Sigma} + CR_{\Sigma} \\ D^{T}LCP &= X^{T}RCP + CR_{\Sigma} \end{aligned} \tag{62}$$

Along with (61), this identity proves that load payments in the auction are always in excess of, or equal to, resource receipts and the outcome of the auction will never leave the Auctioneer revenue deficient. On the contrary, the Auctioneer will end up with the auction revenue surplus in the form of congestion rent. This congestion rent should be returned to market participants. The concrete procedure of the treatment of congestion rent is outside the scope of this paper.

Examples

Examples of LSRP Calculation

All presented examples are developed for a three-bus network graphically depicted on Figure 1.

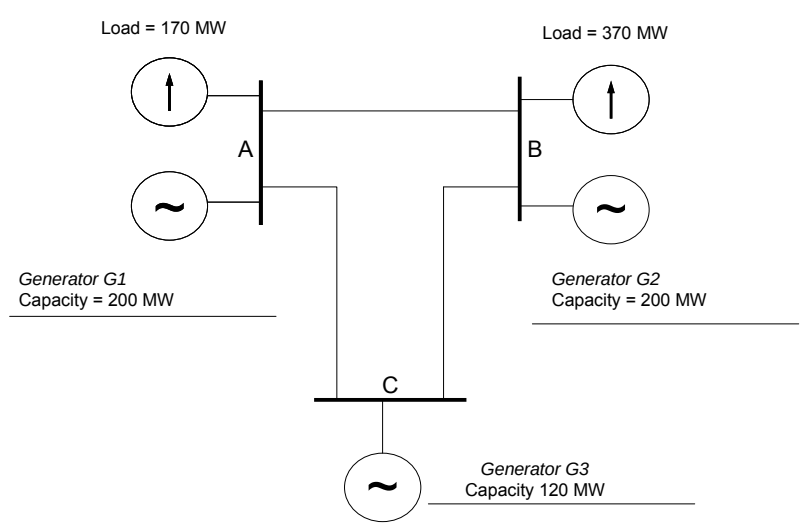

Figure 1. An Example three-node Network

The system depicted on the above figure is short on resources – for 540 MW total demand there is only 520 MW of total online capacity. In the ensuing examples we consider this system under different conditions in terms of locational values of VOLL, transmission constraints and low bound operational limitations on resources and observe how these conditions impact reliability dispatch and values of LSRPs.

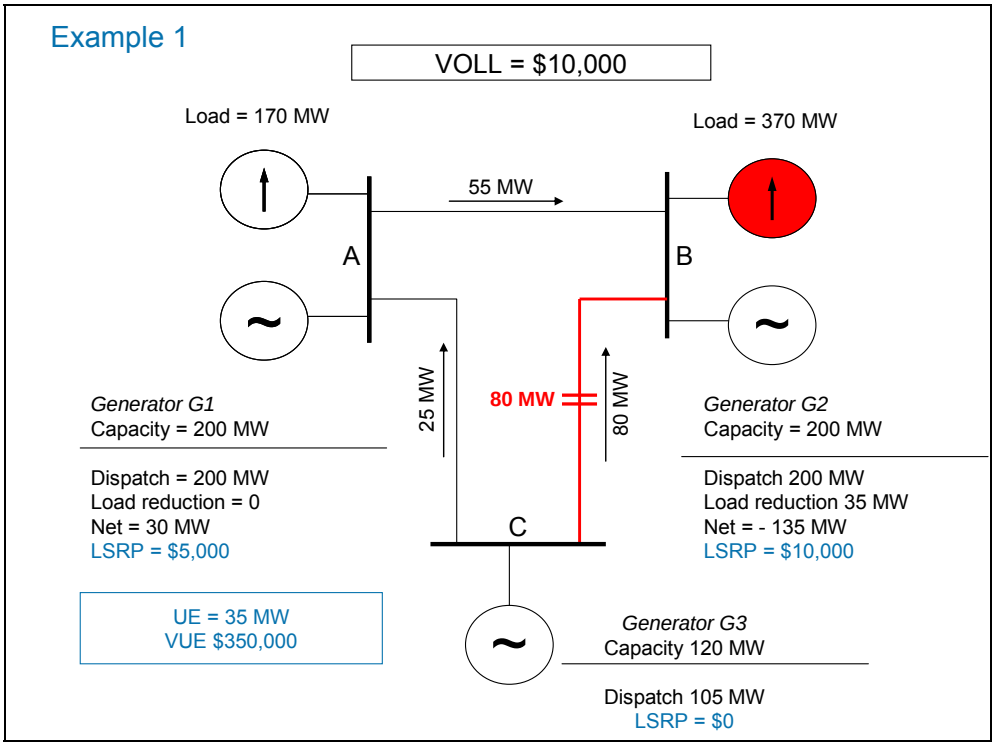

Figure 2. Example 1: Line C-B constrained at 80 MW, uniform VOLL

In Example 1 depicted on Figure 2 constrained transmission line increases actual load shedding to 35 MW and sets different LSRPs at all buses. Marginal load shedding of 35 MW takes place at bus B where LSRP equals VOLL of $10,000. Marginal resource is located at bus C where LSRP is equal to zero. LSRP at bus A is equal to $5,000. A 1 MW demand increase at bus A must come from 2 sources: 0.5 MW from generator at bus C and 0.5 MW additional load shedding at bus B (in order to keep flow on line C within limits). This results in an incremental VUE of $5,000.

This example clearly demonstrates the nodal network impact on LSRPs and ultimately on RCPs. A shortage event like that renders generator G3 at bus C having zero value in its ability to resolve system deficit, while the generator G2 located at the bus where the load is being shed is twice more valuable than the generator G1 located at bus A.

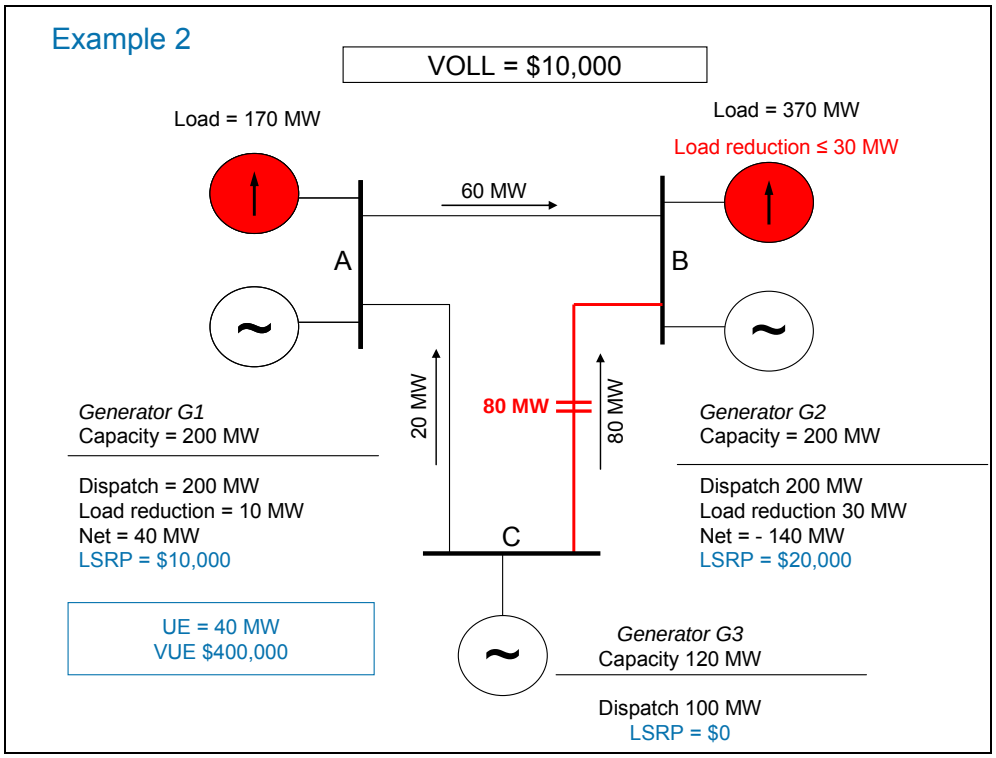

Figure 3. Example 2: Line C-B constrained at 80 MW, uniform VOLL, load reduction at bus B is limited by 30 MW

Example 2 depicted on Figure 3 differs from Example 1 in one additional detail: load reduction at bus B is limited by 30 MW, which is 5 less than the optimal load shedding at that bus in Example 1. Due to constraint along line C-B, it is not enough to simply shed 5 MW at bus A, but in order to maintain system security load at A has to be shed by 10 MW. This results in LSRP at bus A rising to the level of VOLL, while LSRP at bus B is rising to twice the VOLL level! Load shedding limitation at bus B therefore doubles LSRPs at all locations (LSRP at bus A remains at zero).

Example 3 depicted on Figure 4 differs from Examples 1 and 2 in two important elements. First, the flow limit on line C-B is now limited to mere 40 MW and at the same time the cost of load shedding at bus B beyond 30 MW is set at three times the VOLL. The result of imposing these two conditions is that now the overall demand reduction in the system increases to 140 MW, the generator at bus C is forced to shut down. LSRPs in this case are $10,000 at bus A, $30,000 at bus B and -$10,000 at bus C. Although the LSRP at bus C is negative, this will not impose a negative impact on RCP for that generator, because in this case no low bound operational limit is imposed on this resource.

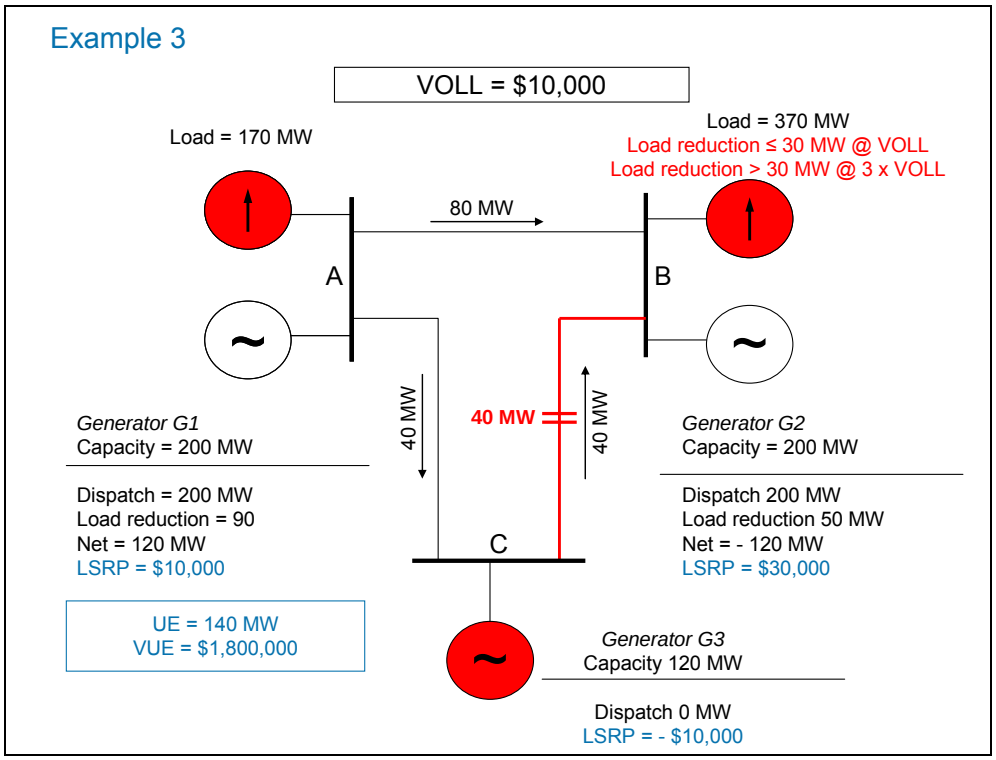

Figure 4. Example 3: Line C-B constrained at 40 MW, uniform VOLL, load reduction at bus B is no longer limited, but the cost of load shedding above 30 MW is set at three times the VOLL

Example 4 depicted on Figure 5 is different from Example 3 only in one instance – a 10 MW low operating bond imposed on Generator G3 at bus C. The LSRPs here are the same as in Example 3. The overall load reduction is actually 10 MW less than in Example 3: 20 MW less is shed at bus A but 10 MW more load is shed at bus B to maintain the security of line C-B and resulting in $10,000 higher value of unserved energy than in Example 3. But an important distinction of this example is that it produces a negative impact on RCP of generator G3. The per unit low operating bound for this resource is non-zero and this will reduce resource's RCP in accordance with formula (42).

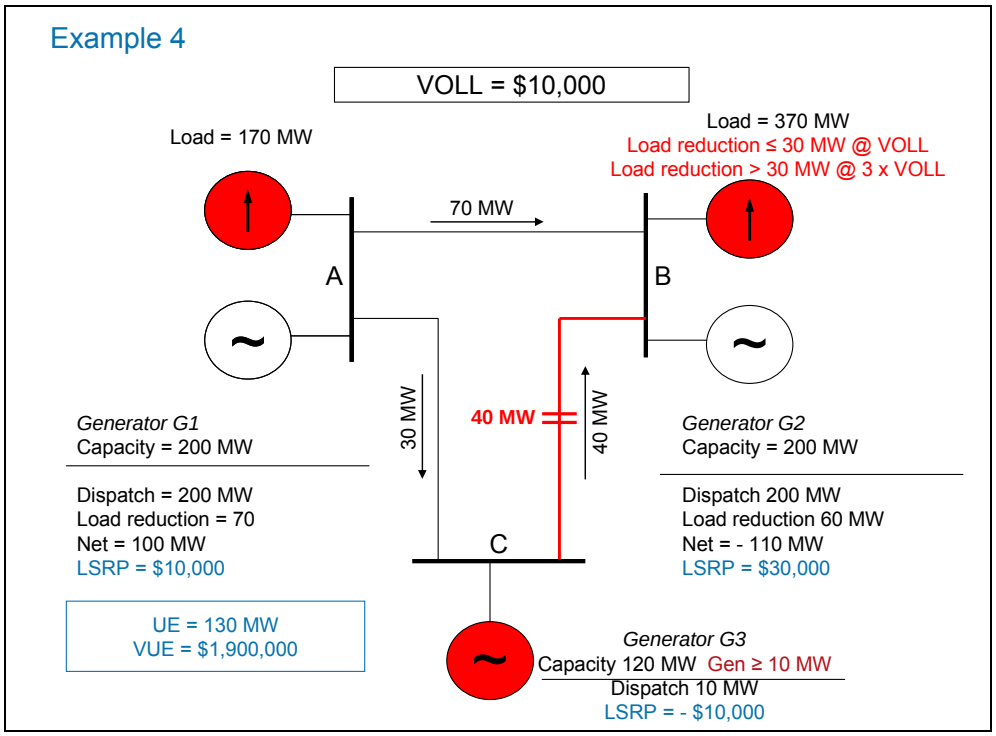

Figure 5. Example 4: Line C-B constrained at 40 MW, uniform VOLL, load reduction at bus B is no longer limited, but the cost of load shedding above 30 MW is set at three times the VOLL, 10 MW low operating limit imposed on Generator G3.

Example of the Auction Outcome

Let us consider a stylized example of the auction outcome and assume that the optimal solution of the auction problem results in exactly four instances of demand rationing represented by the above four examples considered. Each instance of demand rationing lasts one hour and has a probability of occurrence of 0.1/year.

Reliability dispatch results under these scenarios are summarized in Table 1 below.

	Probability	Bus A	Bus B	Bus C
Generator capacities		240	220	130
Load capacity requirements		170	370	0
LRSPs by Scenario				
Example 1	0.1	5,000	10,000	0
Example 2	0.1	10,000	20,000	0
Example 3	0.1	10,000	30,000	(10,000)
Example 4	0.1	10,000	30,000	(10,000)
Loads Servable by Scenario				
Example 1	0.1	170	335	NA
Example 2	0.1	160	340	NA
Example 3	0.1	80	320	NA
Example 4	0.1	100	310	NA
Generator Availabilities by Scenario				
Example 1	0.1	83%	91%	92%
Example 2	0.1	83%	91%	92%
Example 3	0.1	83%	91%	92%
Example 4	0.1	83%	91%	92%
Generator low bound limitations				
Example 1	0.1	0.0%	0.0%	0.0%
Example 2	0.1	0.0%	0.0%	0.0%
Example 3	0.1	0.0%	0.0%	0.0%
Example 4	0.1	0.0%	0.0%	7.7%

Table 1. Summary of Reliability Dispatch

Note that generator capacity shown in the first line of this table are above the generator capacity depicted in the examples. This discrepancy is reflected in the generator availabilities shown in this table.

The auction outcome is summarized in Table 2.

	Bus A	**Bus B**	**Bus C**	**System**
Mean LSRP ($/MW-yr)	3,500	9,000	(2,000)	
Load Capacity Price ($/MW-yr)	2,500	7,851		
Resource Capacity Price ($/MW-yr)	2,917	8,182	(76.92)	
Load Payments ($)	425,000	2,905,000	-	3,330,000
Generator Receipts ($)	700,000	1,800,000	(10,000)	2,490,000
Congestion Rent ($)				840,000

Table 2. Auction Outcome

Due to transmission congestion, LSRPs on average significantly vary by location. Resource capacity prices differ from average LSRPs due to limitations on resource availability. Moreover, due to a low bound operational limitation of generator G3 at bus C, this resource receives overall negative capacity price.

Load capacity prices also differ from average LSRPs and from resource capacity prices both at the same location and across locations (no load capacity price is defined for Bus C, because there is no load at this bus).

Load payments exceed generator receipts due to congestion rent attributable to the constrained line C- B.

Nomenclature:

t - time period (e.g. hour);
T – length of the planning horizon;
ω - index of a stochastic scenario, $\omega = 1, 2, ..., N$;
$\pi(\omega)$ - scenario probability;
$f(t,\omega)$ - vector of stochastic flows through monitored elements of predefined flowgates;
$f^o(t)$ - vector of nominal flows through monitored elements of predefined flowgates used as a basis for linearization;
$\underline{f}(t,\omega), \overline{f}(t,\omega)$ - upper and lower flowgate limits;
$\underline{F}(t,\omega), \overline{F}(t,\omega)$ - upper and lower flowgate limits for linearlized system
$L(t,\omega)$ - vector of stochastic real power demands at buses;
$L^o(t)$ - vector of nominal real power demand at buses (used as a basis for linearization);
$p(t,\omega)$ - vector of stochastic resource injections at buses;
$p^o(t)$ - vector of nominal resource injections at buses(used as a basis for linearization);
X - vector of rated resource capacity, also capacity accepted by the Auctioneer;
$\overline{s}_{ii}(t,\omega)$ - per unit stochastic availability of resource;
$\underline{s}_{ii}(t,\omega)$ - per unit lower bound limit on resource use due to operational constraints;
$\overline{S}(t,\omega)$ - diagonal matrix with $\overline{s}_{ii}(t,\omega)$ as diagonal elements;
$\underline{S}(t,\omega)$ - diagonal matrix with $\underline{s}_{ii}(t,\omega)$ as diagonal elements;
e - vector of ones
$u(t,\omega)$ - vector of stochastic load shedding at busses;
$l(t,\omega)$ - vector of upper limits on load shedding at buses
$UE(t,\omega)$ - system-wide stochastic unserved energy due to load shedding
$EUE(t)$ - expected value of $UE(t,\omega)$
$\mu UE(t,\omega)$ - vector of stochastic marginal unserved energy at buses;
$MEUE(t)$ - expected value of $\mu UE(t,\omega)$
$LOLP$ - loss of load probability;
V - vector of Values of Lost Load at buses
$VUE(t,\omega)$ -stochastic system-wide value of unserved energy;
Y - resource capacity offered at the auction;
c - capacity price offers at the auction;

$\underline{\beta}, \overline{\beta}$ - auction shadow prices for selecting capacity within offered limits
R - value of Auctioneer's objective function
$\lambda(t,\omega)$ - stochastic auction shadow price for system balance;
$\underline{\mu}(t,\omega), \overline{\mu}(t,\omega)$ - stochastic auction shadow prices for flowgate constraints;
$\underline{\alpha}(t,\omega), \overline{\alpha}(t,\omega)$ - stochastic auction shadow prices for resource injections feasibility;
$\underline{\theta}(t,\omega), \overline{\theta}(t,\omega)$ - stochastic auction shadow prices for load shedding feasibility;
Λ - Lagrangian of the auction optimization problem;
RCP - vector of resource capacity prices;
$LSRP(t,\omega)$ - locational stochastic reliability prices;
RR - vector of resource receipts at the auction;
RR_Σ - total resource receipts at the auction;
D - vector of forecast peak demand at buses;.
LCP - vector of load capacity prices;
LP - vector of load payments at the auction
LP_Σ - total load payments at the auction;
$CR(t,\omega)$ - stochastic congestion rent of reliability dispatch
CR_Σ - congestion rent of the auction